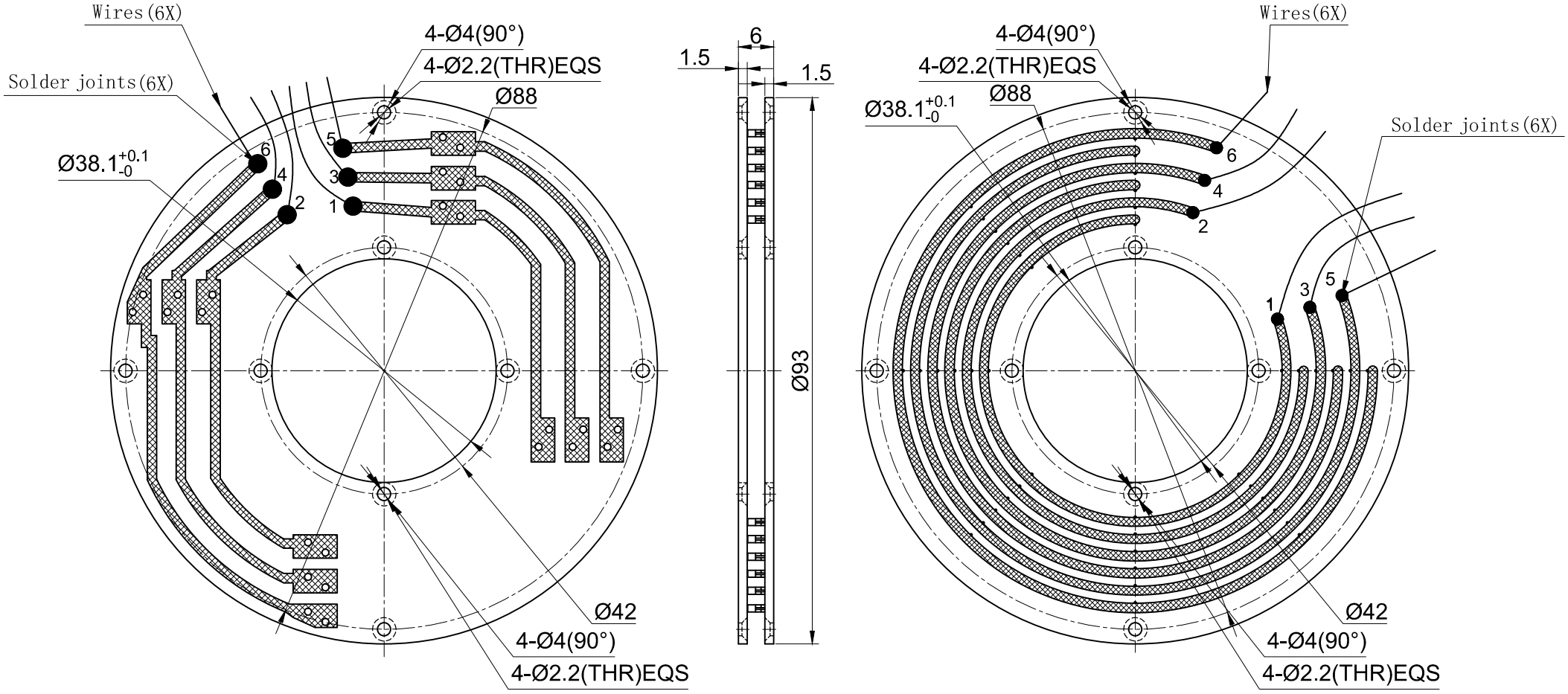
Wires(6X)
Solder joints(6X)
4-Ø4(90°)
4-Ø2.2(THR)EQS
Ø88
Ø38.1+0.1 -0
6
4
2
5
3
1
Ø42
4-Ø4(90°)
4-Ø2.2(THR)EQS
6
1.5
1.5
Ø93
Wires(6X)
4-Ø4(90°)
4-Ø2.2(THR)EQS
Ø88
Ø38.1+0.1 -0
Solder joints(6X)
6
4
2
1
3
5
Ø42
4-Ø4(90°)
4-Ø2.2(THR)EQS