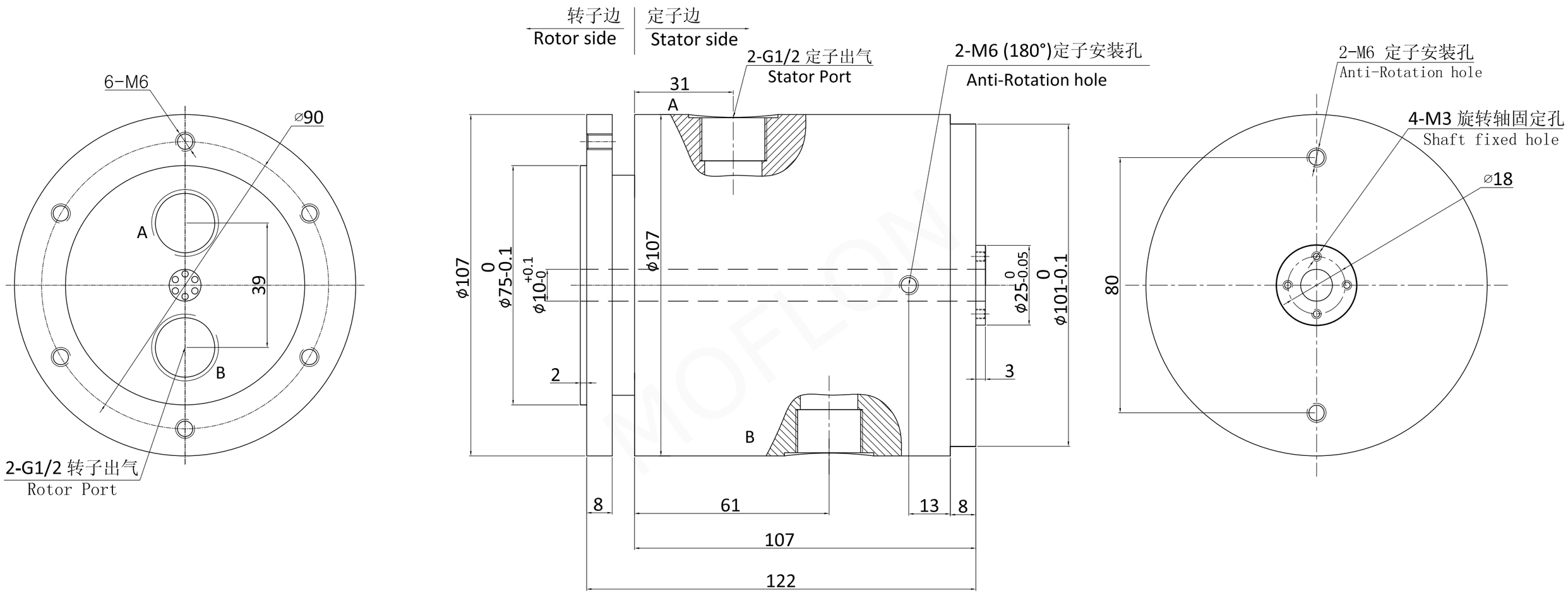

6-M6
⌀90
A
39
B
2-G1/2 转子出气
Rotor Port
转子边
Rotor side
定子边
Stator side
2-G1/2 定子出气
Stator Port
31
A
2-M6 (180°)定子安装孔
Anti-Rotation hole
⌀107
⌀75-0.1 0
⌀10 +0.1 -0
⌀107
⌀25 0 -0.05
⌀101-0.1 0
2
3
B
8
61
13
8
107
122
2-M6 定子安装孔
Anti-Rotation hole
4-M3 旋转轴固定孔
Shaft fixed hole
⌀18
80


MAPH200-05