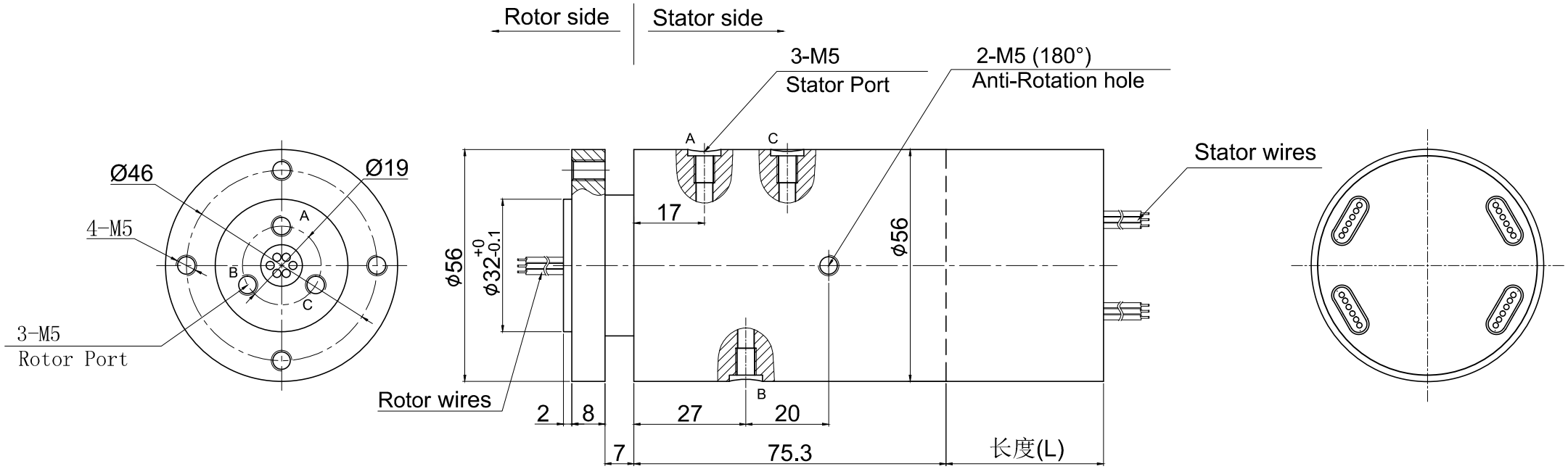
Rotor side
Stator side
3-M5
Stator Port
2-M5 (180°)
Anti-Rotation hole
Stator wires
Ø46
Ø19
4-M5
3-M5
Rotor Port
A
B
C
17
ϕ56
ϕ32 +0 -0.1
ϕ56
Rotor wires
2
8
27
20
7
75.3
长度(L)