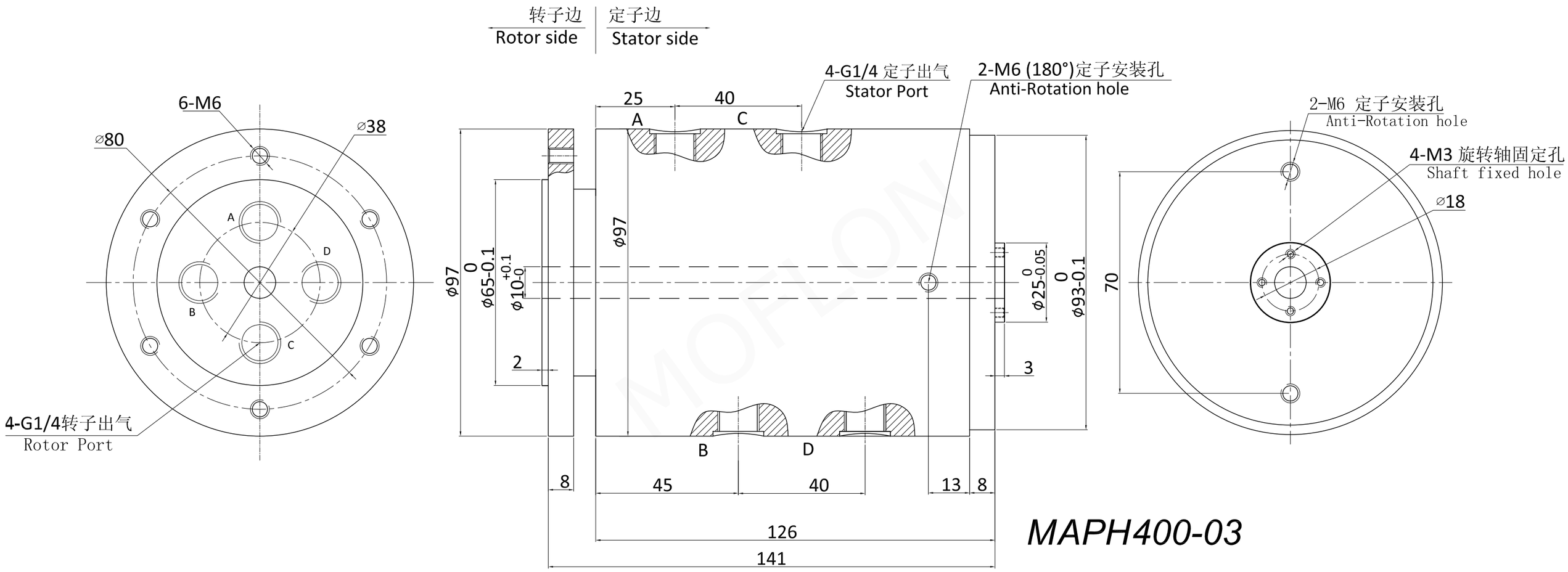
转子边
Rotor side
定子边
Stator side
6-M6
⌀80
⌀38
A
B
C
D
4-G1/4转子出气
Rotor Port
4-G1/4 定子出气
Stator Port
2-M6 (180°)定子安装孔
Anti-Rotation hole
25
40
A
C
B
D
ϕ97
ϕ97 0 -0.1
ϕ65
ϕ10 +0.1 0
ϕ25 0 -0.05
ϕ93 0 -0.1
2
3
8
45
40
13
8
126
141
70
2-M6 定子安装孔
Anti-Rotation hole
4-M3 旋转轴固定孔
Shaft fixed hole
⌀18
MAPH400-03