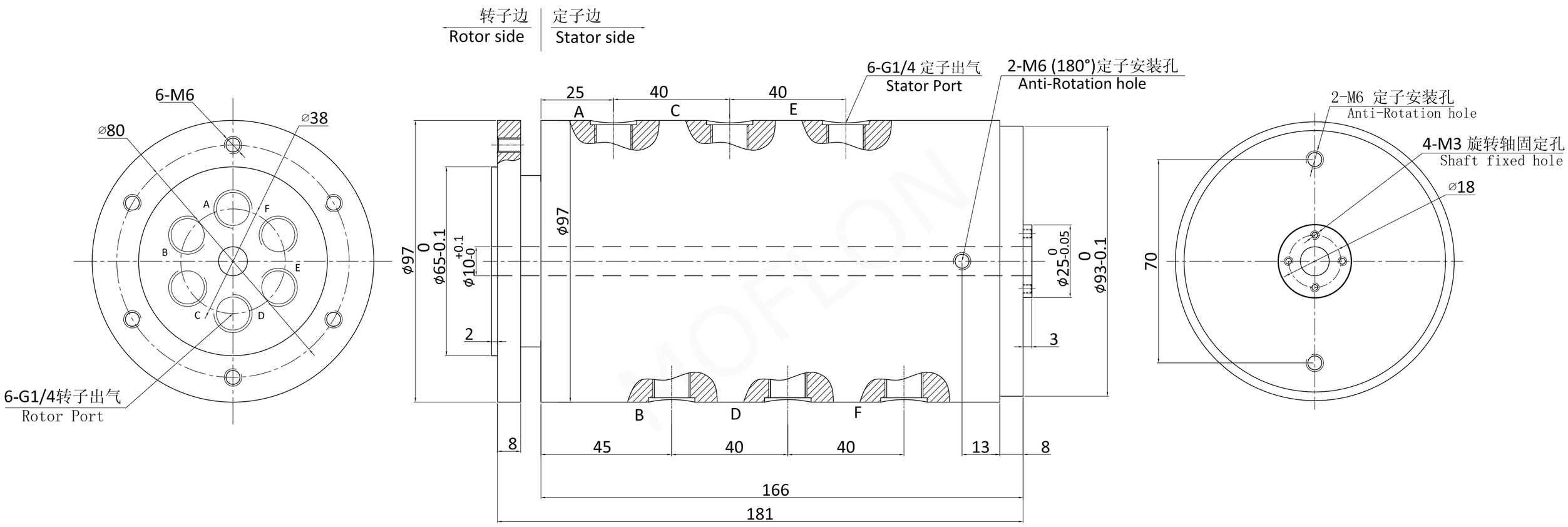
转子边
Rotor side
定子边
Stator side
6-M6
⌀80
⌀38
A
B
C
D
E
F
6-G1/4转子出气
Rotor Port
6-G1/4 定子出气
Stator Port
2-M6 (180°)定子安装孔
Anti-Rotation hole
25
40
40
ϕ97
ϕ65-0.1
ϕ10
2
ϕ25-0.05
ϕ93-0.1
3
8
45
40
40
13
8
166
181
2-M6 定子安装孔
Anti-Rotation hole
4-M3 旋转轴固定孔
Shaft fixed hole
⌀18
70

MAPH600-03