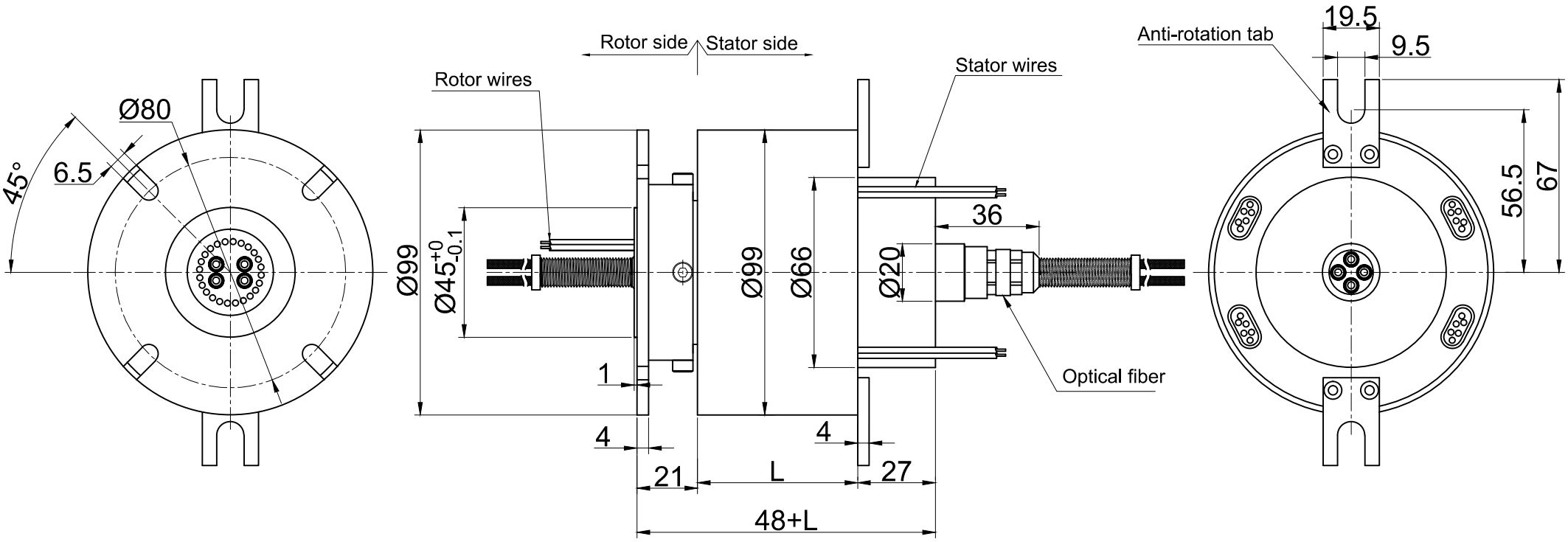
Ø80
6.5
45°
Rotor side
Stator side
Rotor wires
Stator wires
Ø99
Ø45+0 -0.1
Ø99
Ø66
Ø20
36
1
4
4
21
L
27
48+L
Optical fiber
Anti-rotation tab
19.5
9.5
56.5
67