MP210 Series Pancake Slip Ring

MP210 pancake slip ring has a thickness of 20mm,through bore size is 12.7mm,all aluminum alloy structure,using precious metal contact material and gold-plated processing It can transmit stable signal and power with small resistance fluctuations

Designed for min thickness requirements, when thickness is limitative but diameter is no limitative.

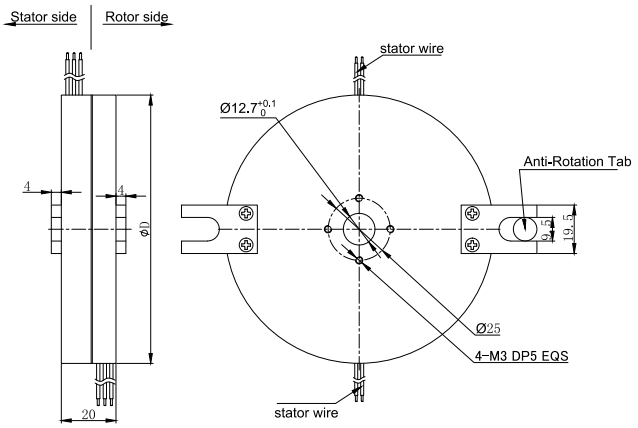

Explanation

MP 210 - P 06 10- S 06 - VC

- MP: code for pancake slip ring
- 210: compact thickness with bore size 12.7mm
- P: power ring
- 0610: 6 rings , 0~10A each ring
- S: signal ring
- 06: 6 signal rings(0~5A each ring)
- Products quality level
  - VC common quality version
  - VD industrial quality version
  - Default =VC version

Part# list

MP210 Series Pancake Slip Ring				
Parts#	Signal (5A)	10A	20A	ΦD (mm)
MP210-S02	2	0	0	76
MP210-P0210	0	2	0	76
MP210-P0210-S02	2	2	0	92
MP210-P0410	0	4	0	92
MP210-S06	6	0	0	108
MP210-P0610	0	6	0	108
MP0410-S02	2	4	6	108
MP210-P0210-S04	4	2	0	108
MP210-S12	12	0	0	156
MP210-P1210	0	12	0	156
MP210-P1220	0	0	12	156
MP210-P0610-S06	6	6	0	156
MP210-P0620-S06	6	0	6	156
MP210-S18	18	0	0	204
MP210-P1810	0	18	0	204
MP210-P0610-S12	12	6	0	204
MP210-P1210-S06	6	12	0	204
MP210-P0810-S10	10	8	0	204
MP210-S24	24	0	0	252
MP210-P2410	0	24	0	252
MP210-P0610-S18	18	6	0	252
MP210-P1210-S12	12	12	0	252

Note:1) N channels 10A rings parallel can be used as 1 channel N*10A current. For example: 2 rings 10A parallel could be used as 1 wires 20A
2) Through bore size,total circuits and current can be customized,please contact sales for more details.

Web: http://www.moflon.com Email: sales@moflon.com

Specifications

Electrical Data		
Parameter	Value	
	Power	Signal
Rated Voltage	0~220VAC/VDC	0~220VAC/VDC
Insulation Resistance	≥1000MΩ/240VDC	≥1000MΩ/240VDC
Lead Wire	AWG18#Teflon	AWG24#Teflon
Lead Length	Standard 300mm（adjustable）	
Dielectric Strength	100VAC@50Hz，60s	
Electrical Noise	<0.01Ω	
Mechanical Data		
Parameter	Value	
Working Life	See product quality level table	
Rotating Speed	See product quality level table	
Working Temperature	-30℃~80℃	
Operating Humidity	0~85% RH	
Contact Material	See product quality level table	
Housing Materia	aluminium alloy	
Torque	0.1N.m；+0.03N.m/6rings	
Protection Grade	IP51	

Product Quality Level Table

Products Level Code	Max Rotating Speed	Working Life	Contact Material
VC	60RPM	3 million revs	Precious Metal
VD	200RPM	10 million revs	Gold-plated

Lead Wires Color Code

Ring	1	2	3	4	5	6	7	8	9	10	11	12
Color	BLK	RED	YEL	GRN	BLU	WHT	BLK	RED	YEL	GRN	BLU	WHT

Note: 6 wires for 1 group color, from 7-12, repeat the same color as 1...6, indicated with number code pipe.