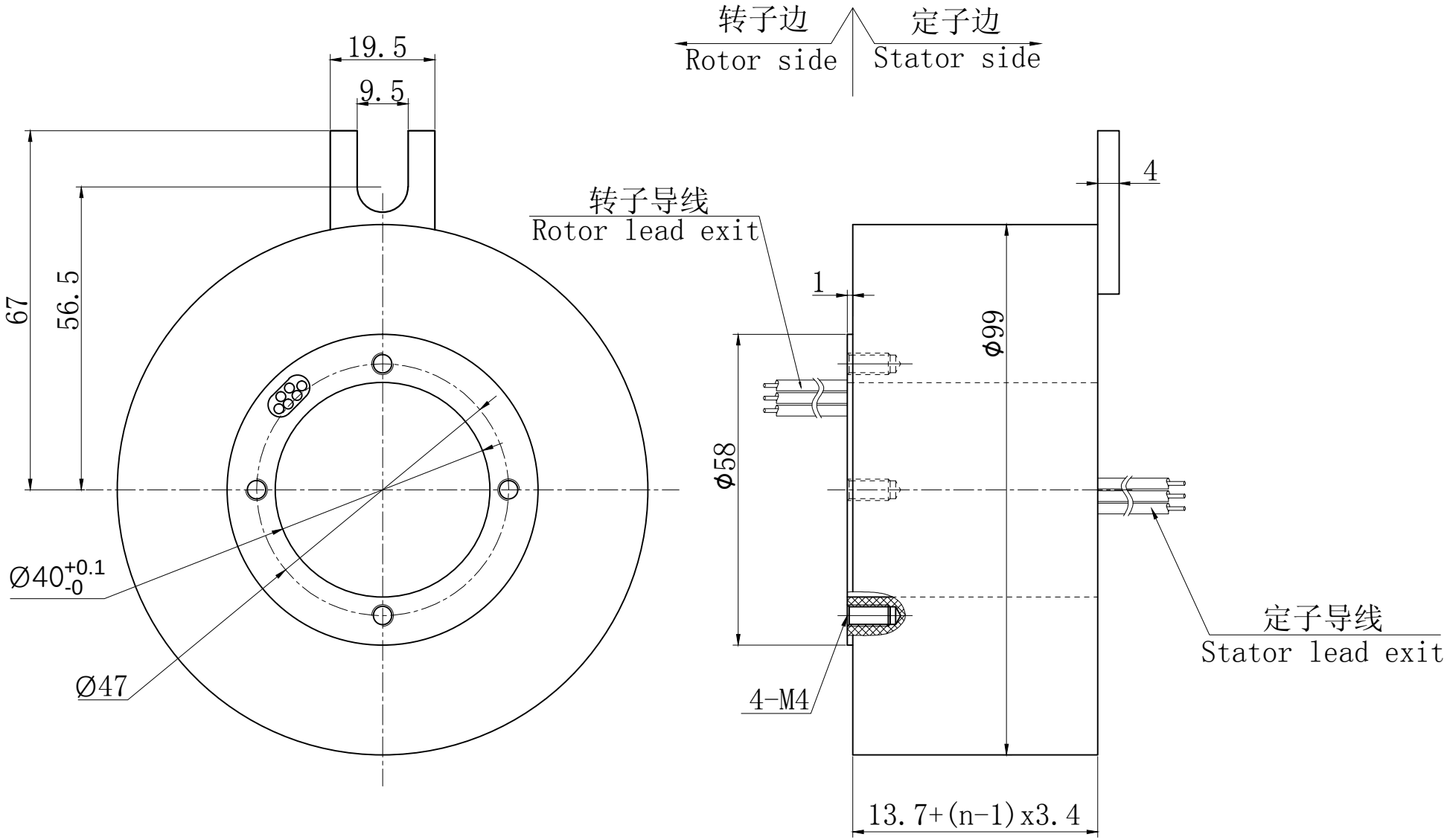
转子边
Rotor side
定子边
Stator side
19.5
9.5
67
56.5
转子导线
Rotor lead exit
4
1
Φ99
Φ58
Ø40 +0.1 -0
Ø47
4-M4
定子导线
Stator lead exit
13.7+(n-1)x3.4