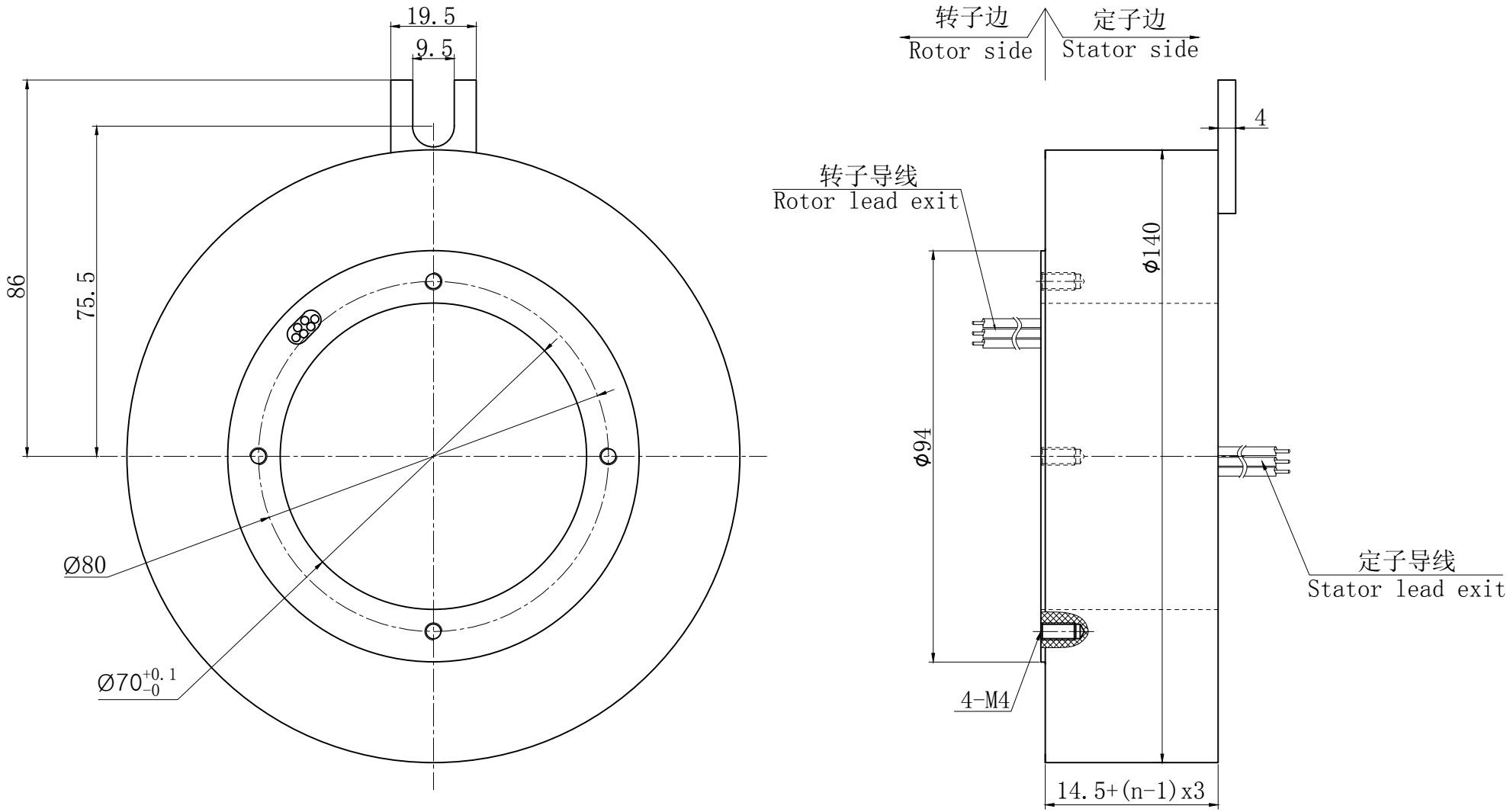
19.5
9.5
86
75.5
Ø80
Ø70+0.1 -0
转子边
Rotor side
定子边
Stator side
4
转子导线
Rotor lead exit
ϕ140
ϕ94
定子导线
Stator lead exit
4-M4
14.5+(n-1)x3