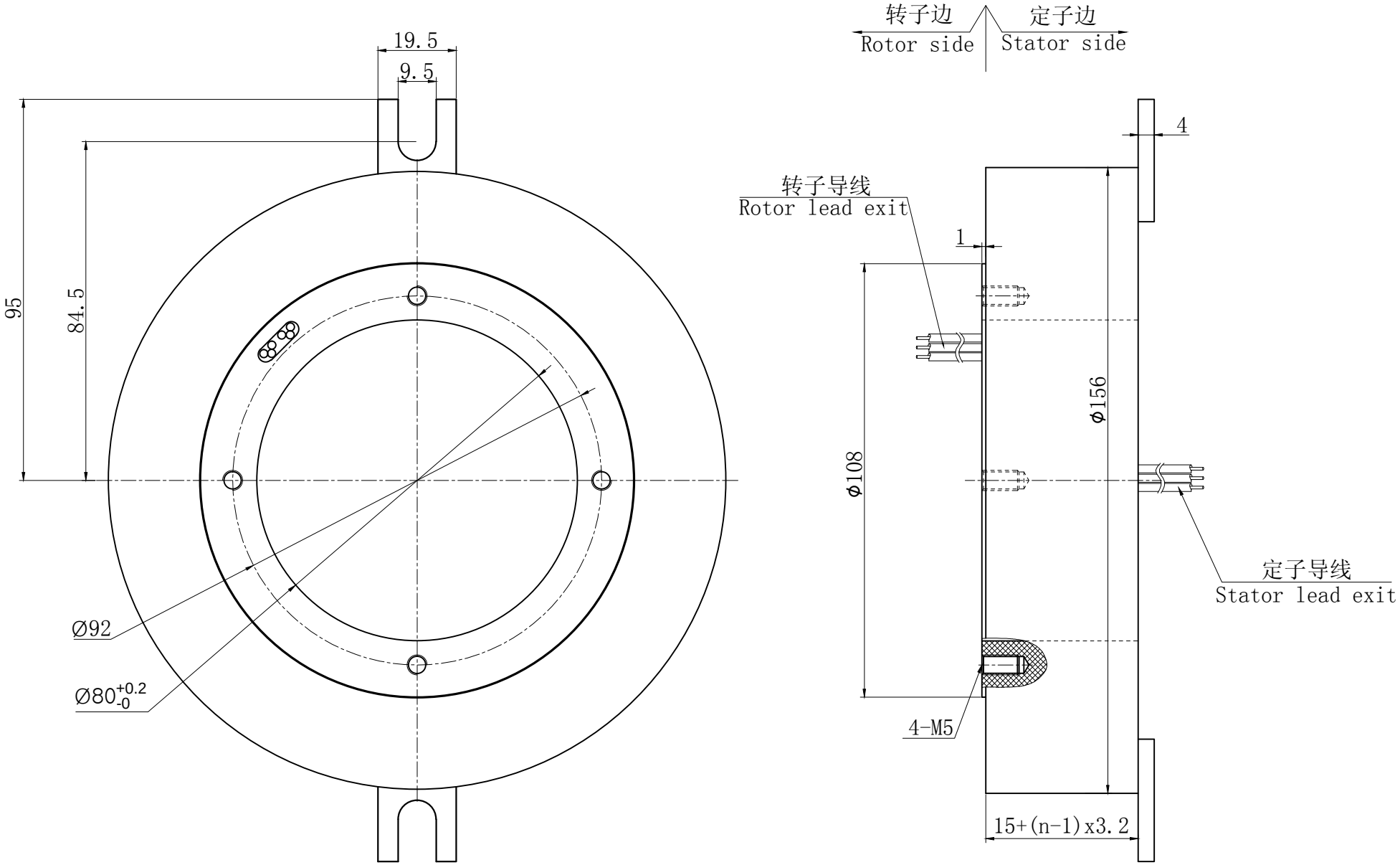
19.5
9.5
95
84.5
Ø92
Ø80+0.2 -0
转子边
Rotor side
定子边
Stator side
4
转子导线
Rotor lead exit
1
Φ156
Φ108
定子导线
Stator lead exit
4-M5
15+(n-1)x3.2