MOFLON

In the field of microwave communication technology, the rotary joint is a very important communication device, which is mainly used in various civil or military radars, including aircraft air control, airspace defense, mobile communications, satellite type transmission, etc.
At present, our company can provide customers with rotary joints used in various applications, and its technical indicators have reached the leading level, including coaxial pumps, waveguides, waveguide coaxial hybrids, optical communications, etc., and Including single-channel, dual-channel, three-channel and various multi-channel rotary joints.

MOFLON

Single Channel Coaxial Rotary Joint

Part number	1226SS
Connector type	SMA-F(50Ω)
Type	I
Power	DC-18GHz
Peak power,max	3KW
Rated power,max	200W@1GHz 40W@15GHz 30W@18GHz
Voltage standing wave ratio,max	1.3@DC-10GHz 1.4@10-18GHz
Voltage standing wave ratio max floating value	0.1
Insertion loss,max	0.3dB@DC-10GHz 0.45dB@10GHz-18GHz
Rotating speed,max	200RPM
Life,min	5Million rpm
Start Torque max	0.05Nm
Torque,max	0.05Nm
Material	Stainless steel
Surface treatment	Passivation
Weight(aroud)	30g
Working condition	
Temperature range	-40℃...+70℃
Relative humidity,max	95%
IP grade	IP40
Storage condition	
Temperature range	-55℃...+85℃
Relative humidity,max	95%

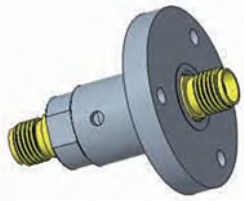

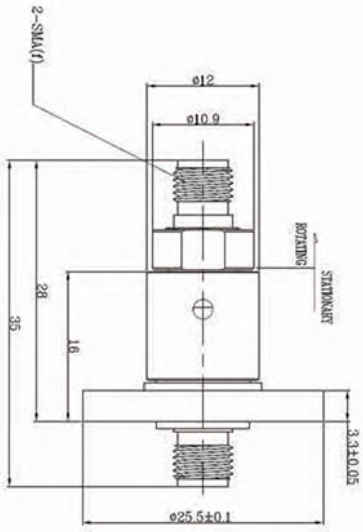

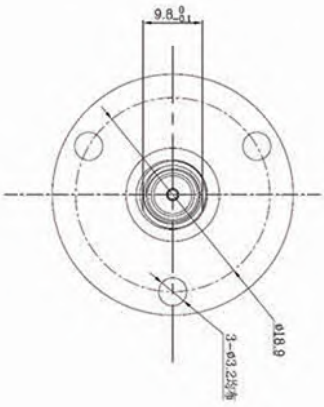

MOFLON

Single Channel Coaxial Rotary Joint

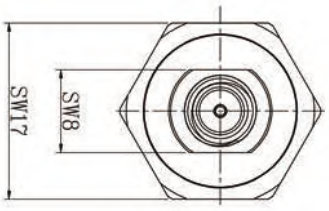

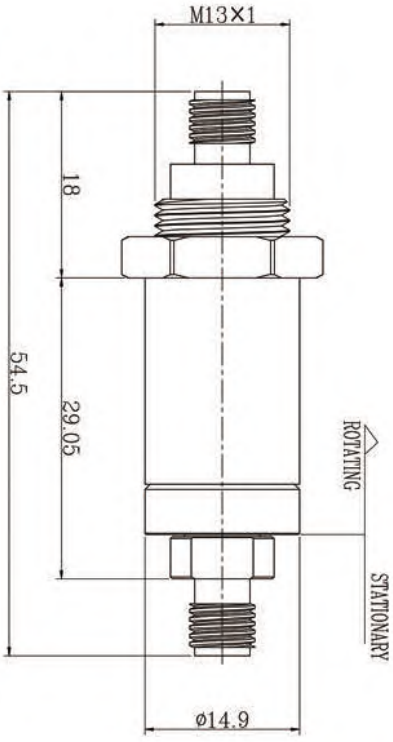

Part number	PM7892
Connector type	SMA-F(50Ω)
Type	I
Power	DC-18GHz
Peak power,max	3KW
Rated power,max	150W@1GHz 40W@15GHz 30W@18GHz
Voltage standing wave ratio,max	1.3@DC-10GHz 1.4@10-18GHz
Voltage standing wave ratio max floating value	0.1
Insertion loss,max	0.3dB@DC-10GHz 0.6dB@10GHz-18GHz
Rotating speed,max	200RPM
Life,min	5Million rpm
Start Torque max	0.05Nm
Torque,max	0.05Nm
Material	Stainless steel
Surface treatment	Passivation
Weight(aroud)	50g
Working condition	
Temperature range	-40℃...+70℃
Relative humidity,max	95%
IP grade	IP40
Storage condition	
Temperature range	-55℃...+85℃
Relative humidity,max	95%

MOFLON

Single Channel Coaxial Rotary Joint

Part number	RJ01-040
Connector type	7/16-F(50Ω)
Type	I
Power	DC-5GHz
Peak power,max	2.0KW
Rated power,max	1.5KW@DC-1.5GHz
	600W@1.5GHz-5GHz
Voltage standing wave ratio,max	1.25
Voltage standing wave ratio max floating value	0.1
Insertion loss,max	0.35dB
Rotating speed,max	0.1dB
Life,min	60RPM
Start Torque max	5Million rpm
Torque,max	0.65Nm
Material	Copper alloy
Surface treatment	Ternary alloy platingbv
Weight(aroud)	1kg
Working condition	
Temperature range	-40℃...+70℃
Relative humidity,max	95%
IP grade	IP64
Storage condition	
Temperature range	-55℃...+85℃
Relative humidity,max	95%

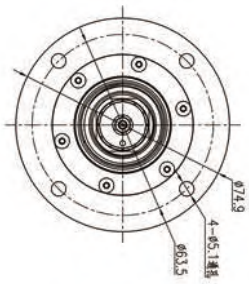

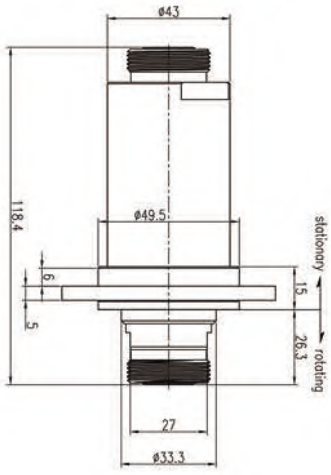

MOFLON

Single Channel Coaxial Rotary Joint

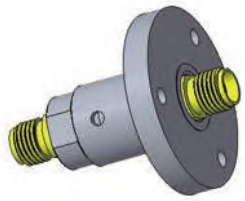

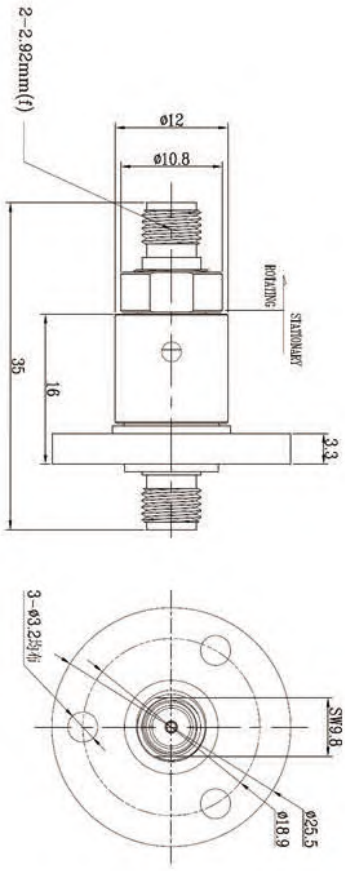

Part number	RJ01-503
Connector type	2.92mm-F(50Ω)
Type	I
Power	DC-40GHz
Peak power,max	500W@1GHz
Rated power,max	5W@DC-10GHz 2W@10-18GHz 1W@18-40GHz
Voltage standing wave ratio,max	1.4@DC-18GHz 1.7@18-26.5GHz 2.0@26.5-40GHz
Voltage standing wave ratio max	0.15
Insertion loss,max	0.5dB@DC-18GHz 1.0dB@18-26.5GHz 1.2dB@26.5-40GHz
Rotating speed,max	200RPM
Life,min	5Million rpm
Start Torque max	0.05Nm
Torque,max	0.05Nm
Material	Stainless steel
Surface treatment	Passivation
Weight(aroud)	30g
Working condition	
Temperature range	-40℃...+70℃
Relative humidity,max	95%
IP grade	IP40
Storage condition	
Temperature range	-55℃...+85℃
Relative humidity,max	95%

MOFLON

Single Channel Coaxial Rotary Joint

Part number	RJ01-506
Connector type	SMA-M(50Ω)
Type	I
Power	DC-3GHz
Peak power,max	2.0KW
Rated power,max	18W
Voltage standing wave ratio,max	1.35
Voltage standing wave ratio max floating value	0.05
Insertion loss,max	1.9dB
insertion loss max floating value	0.2dB
Rotating speed,max	30RPM
Life,min	250000 rpm
Start Torque max	0.05Nm
Torque,max	0.05Nm
Material	Copper alloy
Surface treatment	Ternary alloy platingbv
Weight(aroud)	50g
Working condition	
Temperature range	-40℃...+70℃
Relative humidity,max	95%
IP grade	IP60
Storage condition	
Temperature range	-55℃...+85℃
Relative humidity,max	95%

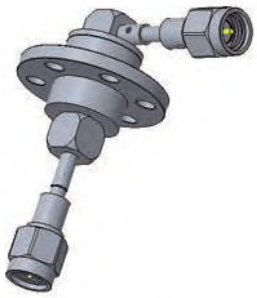

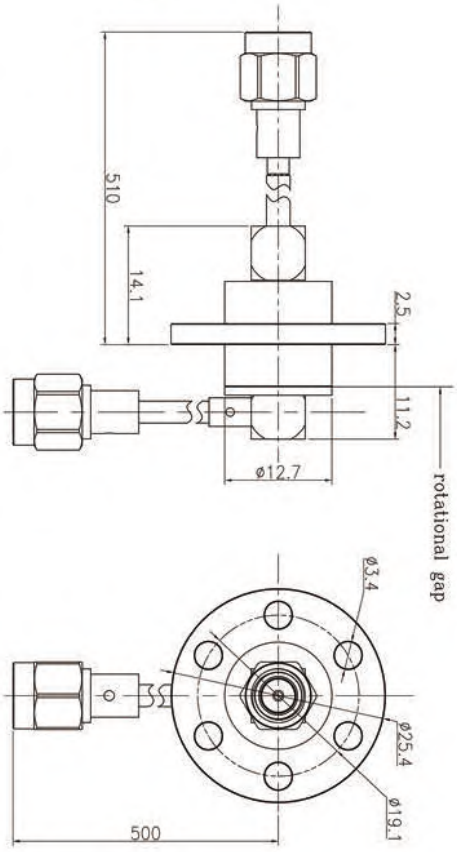

MOFLON

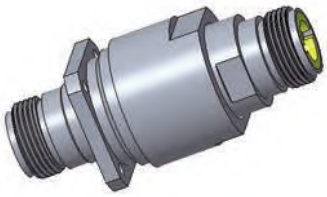

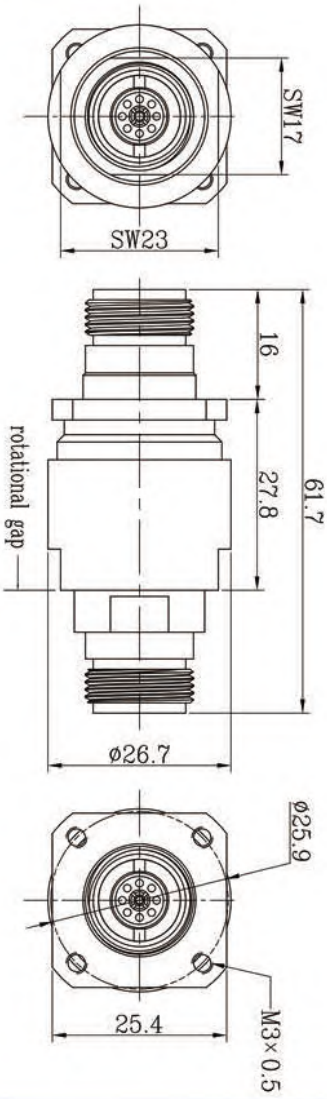

Single Channel Coaxial Rotary Joint

Part number	RJ01-507
Connector type	N-F(50Ω)
Type	I
Power	DC-18GHz
Peak power,max	10KW
Rated power,max	100W@DC-4.5GHz 50W@4.5GHz-8GHz 30W@8GHz-18GHz
Voltage standing wave ratio,max	1.3
Voltage standing wave ratio max floating value	0.05
Insertion loss,max	0.4dB
insertion loss max floating value	0.05dB
Relative stability,max	2deg
Rotating speed,max	30RPM
Life,min	5Million rpm
Start Torque max	0.3Nm
Torque,max	0.3Nm
Material	Copper alloy
Surface treatment	Ternary alloy platingbv
Weight(aroud)	150g
Working condition	
Temperature range	-40℃...+70℃
Relative humidity,max	95%
IP grade	IP60
Storage condition	
Temperature range	-55℃...+85℃
Relative humidity,max	95%

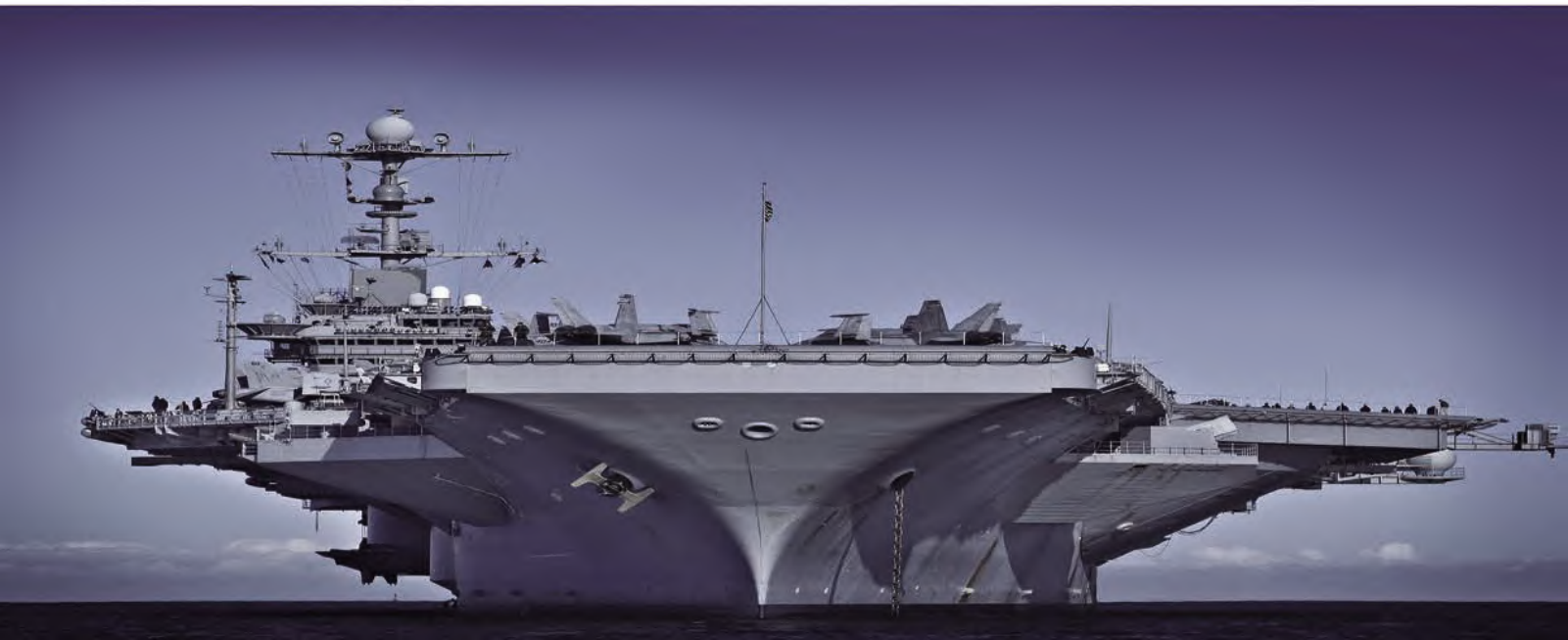

MOFLON

Single Channel Coaxial Rotary Joint

Part number	RJ01-508
Connector type	3.5mm-F(50Ω)/N-F(50Ω)
Type	I
Power	DC-18GHz
Peak power,max	10KW
Rated power,max	200W@DC-2GHz 100W@2GHz-4.5GHz 50W@4.5GHz-8GHz 30W@8GHz-18GHz
Voltage standing wave ratio,max	1.3
Voltage standing wave ratio max floating value	0.05
Insertion loss,max	0.4dB
insertion loss max floating value	0.05dB
Relative stability,max	2deg
Rotating speed,max	30RPM
Life,min	5Million rpm
Start Torque max	0.05Nm
Torque,max	0.05Nm
Material	Copper alloy
Surface treatment	Ternary alloy platingbv
Weight(aroud)	130g
Working condition	
Temperature range	-40℃...+70℃
Relative humidity,max	95%
IP grade	IP60
Storage condition	
Temperature range	-55℃...+85℃
Relative humidity,max	95%

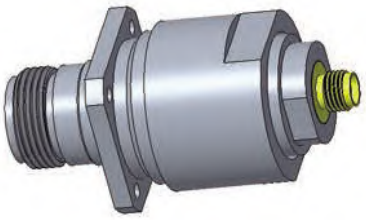

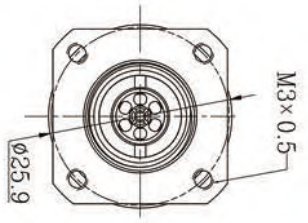

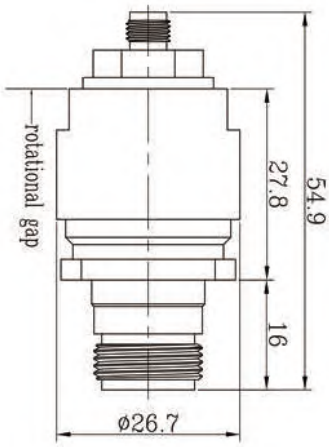

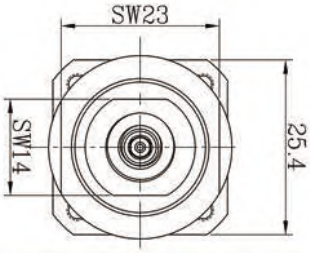

MOFLON

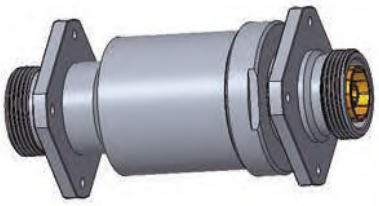

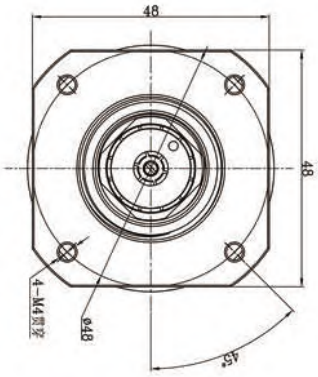

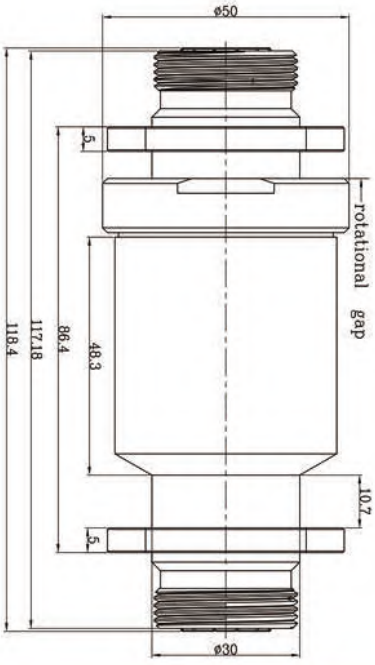

Single Channel Coaxial Rotary Joint

Part number	RJ01-510
Connector type	7/16-F(50Ω)
Type	I
Power	DC-5GHz
Peak power,max	10KW
Rated power,max	600W
Voltage standing wave ratio,max	1.25@DC-5GHz
Voltage standing wave ratio max floating value	0.05
Insertion loss,max	0.35dB@DC-5GHz
insertion loss max floating value	0.02dB
Rotating speed,max	60RPM
Life,min	10Million rpm
Start Torque max	0.8Nm
Torque,max	0.7Nm
Material	Copper alloy
Surface treatment	Ternary alloy platingbv
Weight(aroud)	1Kg
Working condition	
Temperature range	-40℃...+70℃
Relative humidity,max	95%
IP grade	IP64
Storage condition	
Temperature range	-55℃...+85℃
Relative humidity,max	95%

MOFLON

Single Channel Coaxial Rotary Joint

Part number	RJ01-512
Connector type	SMA-F(50Ω)
Type	I
Power	1.2GHz-1.65GHz
Peak power,max	1.5KW
Rated power,max	50W
Voltage standing wave ratio,max	1.4
Voltage standing wave ratio max floating value	0.2
Insertion loss,max	0.5dB
Insertion loss max floating value	0.15dB
Rotating speed,max	60RPM
Life,min	5Million rpm
Start Torque max	0.05Nm
Torque,max	0.05Nm
Material	Aluminium alloy
Surface treatment	Conductive oxidation
Weight(aroud)	810g
Working condition	
Temperature range	-40℃...+70℃
Relative humidity,max	95%
IP grade	IP40
Storage condition	
Temperature range	-55℃...+85℃
Relative humidity,max	95%

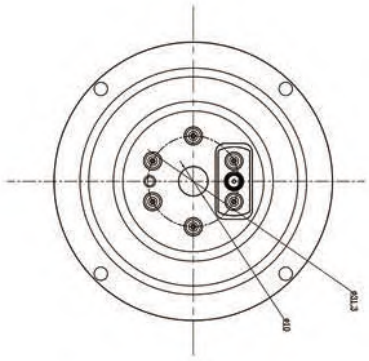

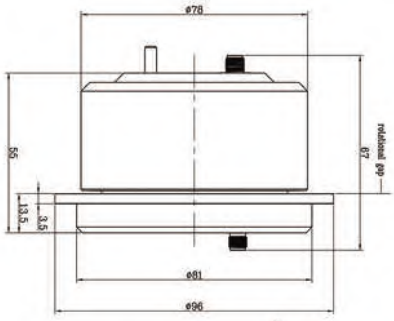

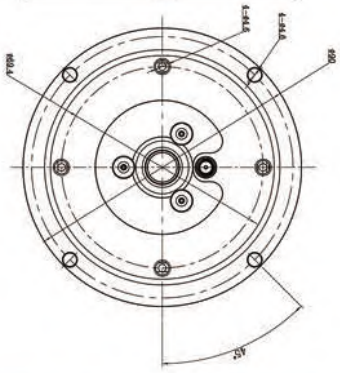

MOFLON

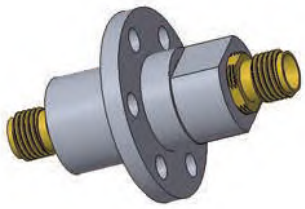

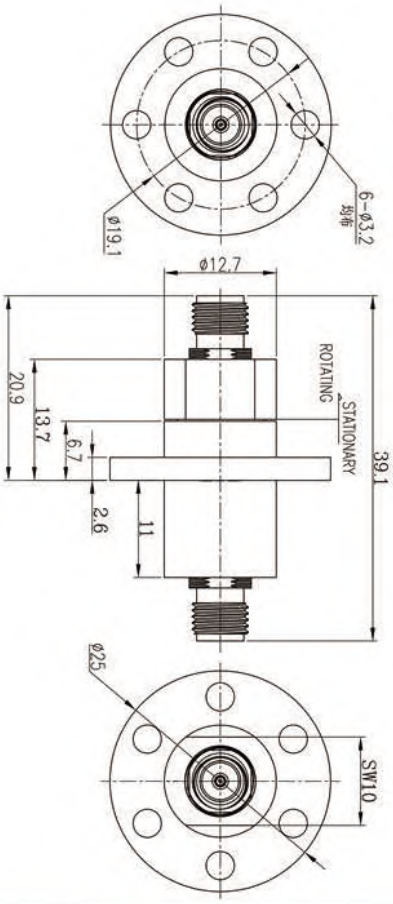

Single Channel Coaxial Rotary Joint

Part number	RJ01-518
Connector type	SMA-F(50Ω)
Type	I
Power	DC-4.5GHz
Peak power,max	3KW
Rated power,max	20W
Voltage standing wave ratio,max	1.2
Voltage standing wave ratio max floating value	0.2
Insertion loss,max	0.3dB
Insertion loss max floating value	0.15dB
Relative stability,max	1 deg
Rotating speed,max	30RPM
Life,min	250000rpm
Torque,max	0.2Nm
Material	Copper alloy
Surface treatment	Ternary alloy plating
Weight(aroud)	30g
Working condition	
Temperature range	-40℃...+70℃
Relative humidity,max	95%
IP grade	IP40
Storage condition	
Temperature range	-55℃...+85℃
Relative humidity,max	95%

MOFLON

Single Channel Coaxial Rotary Joint

Part number	RJ01-531
Connector type	SMA-F(50Ω)
Type	I
Power	DC-6GHz
Peak power,max	3KW
Rated power,max	200W@DC-6GHz
Voltage standing wave ratio,max	1.3
Voltage standing wave ratio max floating value	0.1
Insertion loss,max	0.3dB
Rotating speed,max	60RPM
Life,min	5Million rpm
Start Torque max	0.2Nm
Torque,max	0.2Nm
Material	Stainless steel
Surface treatment	Passivation
Weight(aroud)	120g
Working condition	
Temperature range	-40℃...+70℃
Relative humidity,max	95%
IP grade	IP61
Storage condition	
Temperature range	-55℃...+85℃
Relative humidity,max	95%

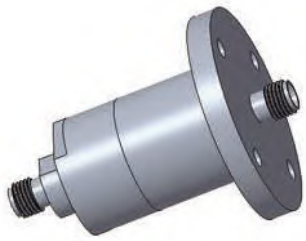

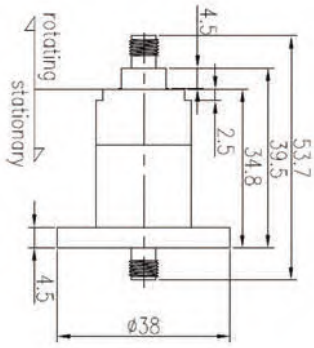

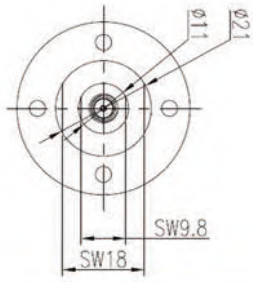

MOFLON

Single Channel Coaxial Rotary Joint

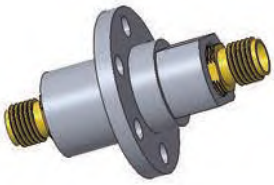

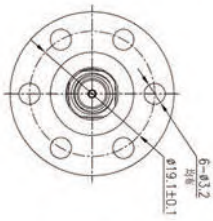

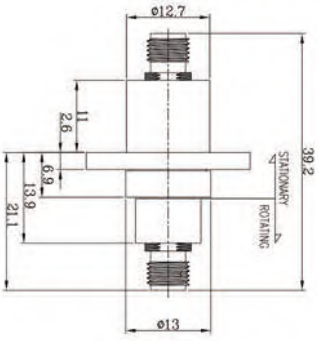

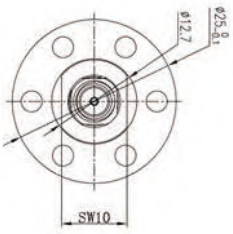

Part number	RJ01-534
Connector type	SMA-F(50Ω)
Type	I
Power	DC-4.5GHz
Peak power,max	3KW
Rated power,max	20W
Voltage standing wave ratio,max	1.3
Voltage standing wave ratio max floating value	0.2
Insertion loss,max	0.3dB
Insertion loss max floating value	0.05dB
Relative stability,max	1 deg
Rotating speed,max	30RPM
Life,min	1 million rpm
Torque,max	0.2Nm
Material	Stainless steel
Surface treatment	Passivation
Weight(aroud)	120g
Working condition	
Temperature range	-40℃...+70℃
Relative humidity,max	95%
IP grade	IP61
Storage condition	
Temperature range	-55℃...+85℃
Relative humidity,max	95%

MOFLON

Single Channel Coaxial Rotary Joint

Part number	RJ01-536
Connector type	SMA-F(50Ω)
Type	I
Power	DC-18GHz
Peak power,max	1KW
Rated power,max	150W
Voltage standing wave ratio,max	1.4
Voltage standing wave ratio max floating value	0.15
Insertion loss,max	0.4dB
Rotating speed,max	60RPM
Life,min	5Million rpm
Start Torque max	0.2Nm
Torque,max	0.2Nm
Material	Stainless steel
Surface treatment	Passivation
Weight(aroud)	120g
Working condition	
Temperature range	-40℃...+70℃
Relative humidity,max	95%
IP grade	IP61
Storage condition	
Temperature range	-55℃...+85℃
Relative humidity,max	95%

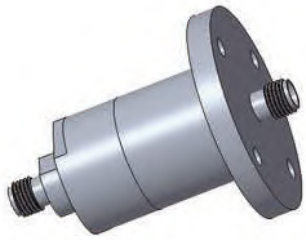

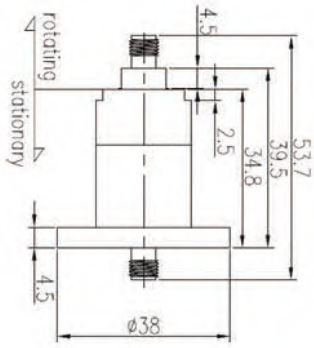

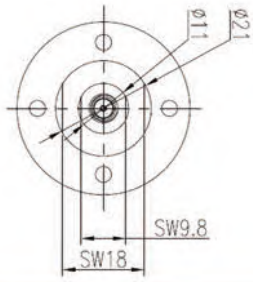

MOFLON

Single Channel Coaxial Rotary Joint

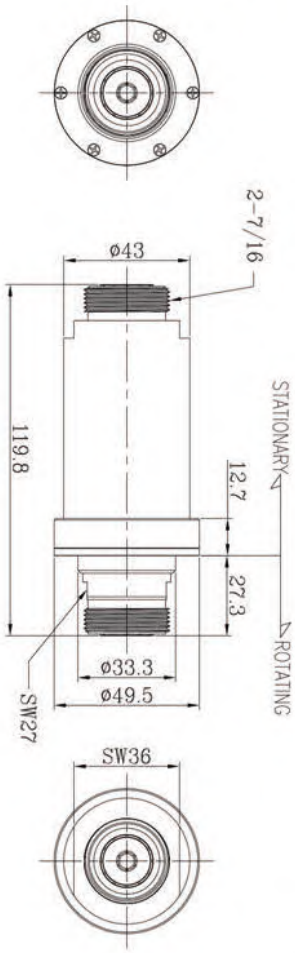

Part number	RJ01-556
Connector type	7/16-F(50Ω)
Type	I
Power	2.8-3.4GHz
Peak power,max	50KW
Rated power,max	850W
Voltage standing wave ratio,max	1.06
Voltage standing wave ratio max floating value	0.05
Insertion loss,max	0.1dB
Insertion loss max floating value	0.01dB
Relative stability,max	1 deg
Rotating speed,max	60RPM
Life,min	5Million rpm
Start Torque max	0.65Nm
Torque,max	0.5Nm
Material	Copper alloy
Surface treatment	Ternary alloy plating
Weight(aroud)	0.9g
Working condition	
Temperature range	-40℃...+70℃
Relative humidity,max	95%
IP grade	IP54
Storage condition	
Temperature range	-55℃...+85℃
Relative humidity,max	95%

MOFLON

Two Way Coaxial Rotary Joint

Part number	RJ02-011	
Channel	Channel 1	Channel 2
Connector type	2.92mm-F(50Ω)	2.92mm-F(50Ω)
Type	I	I
Power	DC-18GHz	DC-18GHz
Peak power,max	2KW	2KW
Rated power,max	50W@1GHz	50W@1GHz
Voltage standing wave ratio,max	1.35@DC-8GHz	2@DC-4GHz
	1.75@8-18GHz	3@4-8GHz
		3.5@8-12GHz
		4.5@12-18GHz
Voltage standing wave ratio max floating value	0.05	0.1@DC-4GHz
		0.35@4-8GHz
		0.8@8-12GHz
		2.0@12-18GHz
Insertion loss,max	0.4dB @DC-8GHz	0.75dB@DC-4GHz
	1.0dB @8-18GHz	1.5dB@4-8GHz
		2.5dB@8-12GHz
		3dB@12-18GHz
Insertion loss max floating value	0.05	0.1dB@DC-4GHz
		0.3dB@4-8GHz
		0.75dB@8-12GHz
		1.5dB@12-18GHz
Isolation,min	50dB	50dB
Rotating speed,max	50RPM	
Life,min	21Million rpm	
Torque,max	0.11Nm	
Material	Aluminium alloy	
Surface treatment	Conductive oxidation	
Weight(aroud)	284g	
Working condition		
Temperature range	-40°C...+70°C	
Relative humidity,max	95%	
IP grade	IP40	
Storage condition		
Temperature range	-55°C...+85°C	
Relative humidity,max	95%	

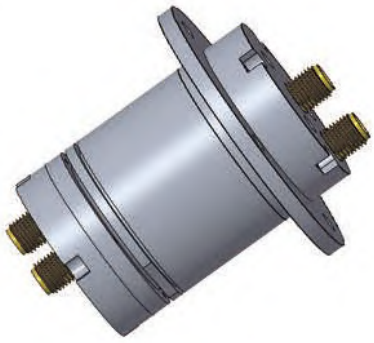

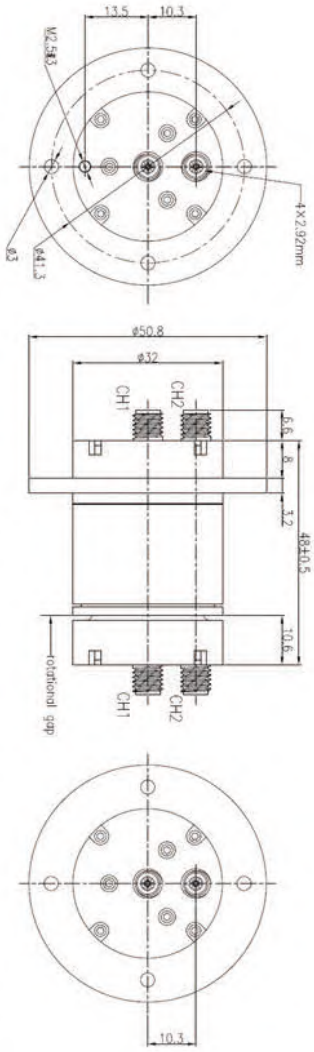

MOFLON

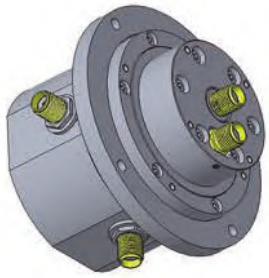

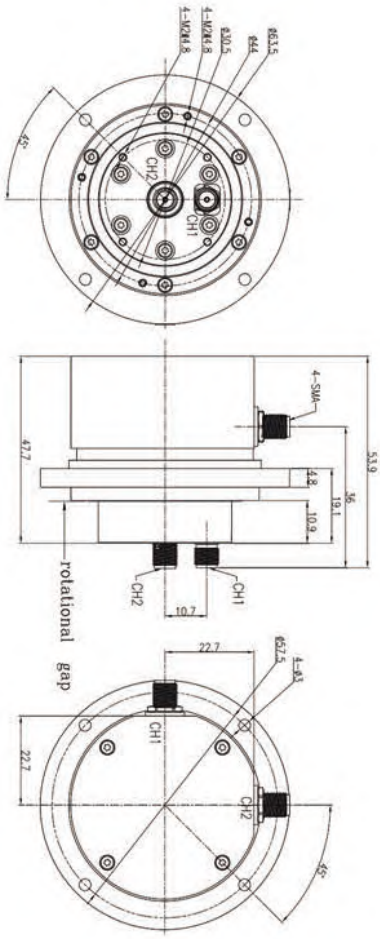

Two Way Coaxial Rotary Joint

Part number	RJ02-022	
Channel	Channel 1	Channel 2
Connector type	SMA-F(50Ω)	SMA-F(50Ω)
Type	I	I
Power	10.7-12.75GHz	13.75-14.5GHz
Peak power,max	10W	10W
Voltage standing wave ratio,max	1.45	1.45
Voltage standing wave ratio max floating value	0.1	0.1
Insertion loss,max	1.0dB	1.0dB
Insertion loss max floating value	0.3dB	0.3dB
Isolation,min	50dB	50dB
Rotating speed,max	10RPM	
Life,min	15Million rpm	
Torque,max	0.03Nm	
Material	Aluminium alloy	
Surface treatment	Conductive oxidation	
Weight(aroud)	295g	
Working condition		
Temperature range	-40°C...+70°C	
Relative humidity,max	95%	
IP grade	IP40	
Storage condition		
Temperature range	-55°C...+85°C	
Relative humidity,max	95%	

MOFLON

Two Way Coaxial Rotary Joint

Part number	RJ02-501	
Channel	Channel 1	Channel 2
Connector type	SMA-F(50Ω)	SMA-F(50Ω)
Type	I	I
Power	DC-4.5GHz	DC-4.5GHz
Peak power,max	1KW	1KW
Rated power,max	100W DC-2GHz	10W
	60W 2-4.5GHz	
Voltage standing wave ratio,max	1.2	1.5
Voltage standing wave ratio max floating value	0.05	0.2
Insertion loss,max	0.25dB	0.5dB
Insertion loss max floating value	0.05dB	0.15dB
Isolation,min	50dB	50dB
Relative stability,max	1deg	4deg
Rotating speed,max	30RPM	
Life,min	5Million rpm	
Start Torque max	0.05Nm	
Torque,max	0.05Nm	
Material	Aluminium alloy	
Surface treatment	Conductive oxidation	
Weight(aroud)	130g	
Working condition		
Temperature range	-40°C...+70°C	
Relative humidity,max	95%	
IP grade	IP40	
Storage condition		
Temperature range	-55°C...+85°C	
Relative humidity,max	95%	

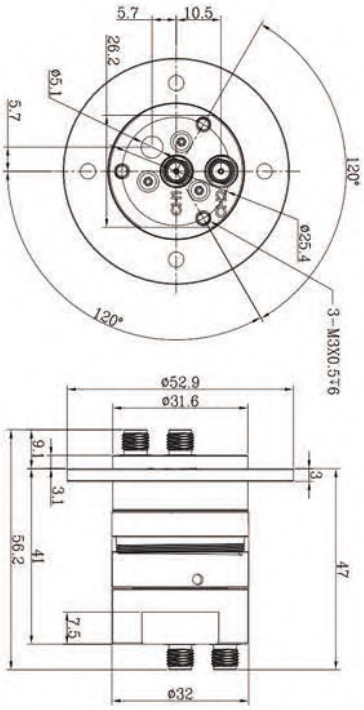

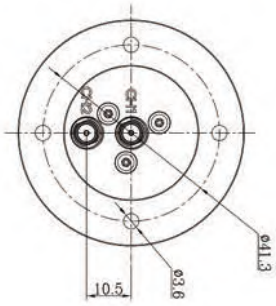

MOFLON

Two Way Coaxial Rotary Joint

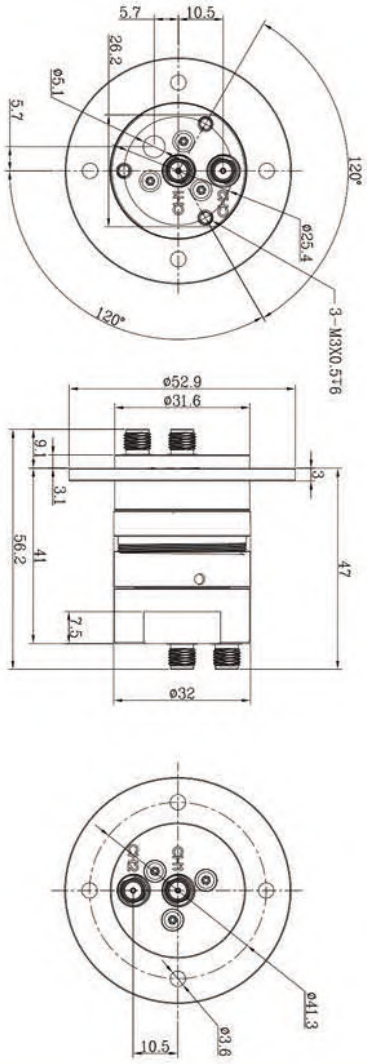

Part number	RJ02-501-8G	
Channel	Channel 1	Channel 2
Connector type	SMA-F(50Ω)	SMA-F(50Ω)
Type	I	I
Power	DC-8GHz	DC-8GHz
Peak power,max	1KW	1KW
Rated power,max	100W DC-2GHz	10W
	35W 2-8GHz	
Voltage standing wave ratio,max	1.3	1.6
Voltage standing wave ratio max floating value	0.1	0.2
Insertion loss,max	0.4dB	0.8dB
Insertion loss max floating value	0.1dB	0.3dB
Isolation,min	50dB	50dB
Relative stability,max	1deg	4deg
Rotating speed,max	30RPM	
Life,min	5Million rpm	
Start Torque max	0.05Nm	
Torque,max	0.05Nm	
Material	Aluminium alloy	
Surface treatment	Conductive oxidation	
Weight(aroud)	130g	
Working condition		
Temperature range	-40°C...+70°C	
Relative humidity,max	95%	
IP grade	IP60	
Storage condition		
Temperature range	-55°C...+85°C	
Relative humidity,max	95%	

Two Way Coaxial Rotary Joint

MOFLON

Part number	RJ02-501-18G	
Channel	Channel 1	Channel 2
Connector type	SMA-F(50Ω)	SMA-F(50Ω)
Type	I	I
Power	DC-18GHz	DC-13GHz
Peak power,max	1KW	1KW
Rated power,max	100W DC-2GHz 35W 2-8GHz 10W 8-18GHz	10W
Voltage standing wave ratio,max	1.3@DC-8GHz	1.6@DC-8GHz
	1.5@8-18GHz	0.2@8-13GHz
Voltage standing wave ratio max floating value	0.1	0.2
Insertion loss,max	1dB	2dB
Insertion loss max floating value	0.1dB	0.3dB
Isolation,min	50dB	50dB
Relative stability,max	1deg	4deg
Rotating speed,max	30RPM	
Life,min	5Million rpm	
Start Torque max	0.05Nm	
Torque,max	0.05Nm	
Material	Aluminium alloy	
Surface treatment	Conductive oxidation	
Weight(aroud)	130g	
Working condition		
Temperature range	-40°C...+70°C	
Relative humidity,max	95%	
IP grade	IP60	
Storage condition		
Temperature range	-55°C...+85°C	
Relative humidity,max	95%	

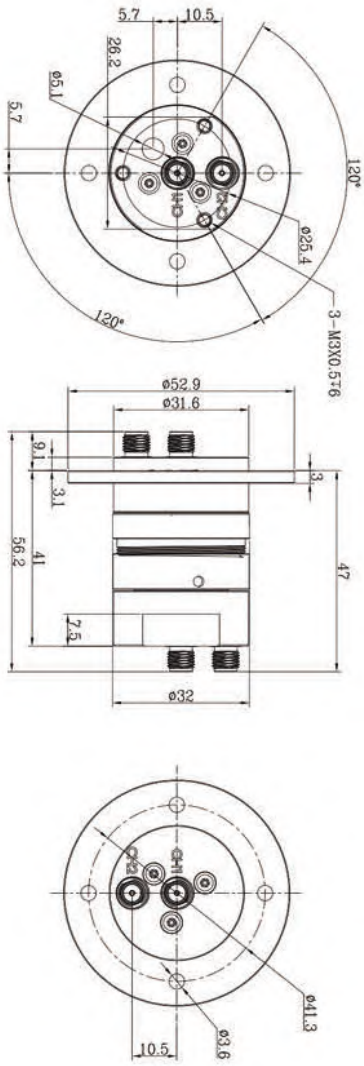

MOFLON

Two Way Coaxial Rotary Joint

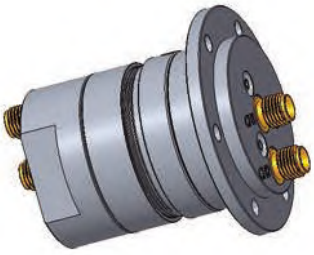

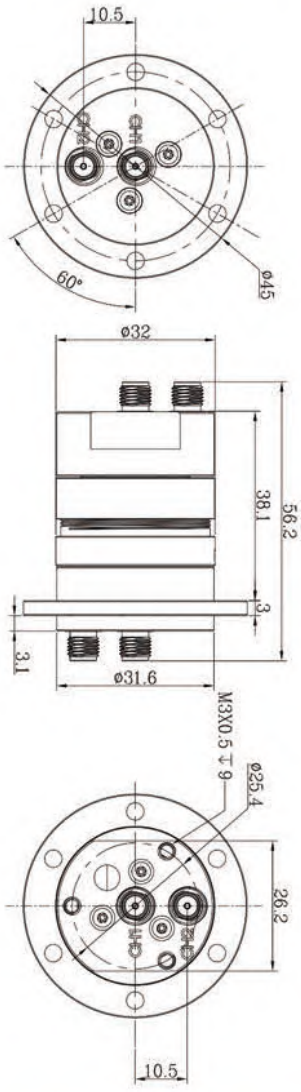

Part number	RJ02-501A	
Channel	Channel 1	Channel 2
Connector type	SMA-F(50Ω)	SMA-F(50Ω)
Type	I	I
Power	DC-4.5GHz	DC-4.5GHz
Peak power,max	1KW	1KW
Rated power,max	100W DC-2GHz	10W
	60W 2-4.5GHz	
Voltage standing wave ratio,max	1.2	1.5
Voltage standing wave ratio max floating value	0.05	0.2
Insertion loss,max	0.25dB	0.4dB
Insertion loss max floating value	0.05dB	0.15dB
Isolation,min	50dB	50dB
Relative stability,max	1deg	4deg
Rotating speed,max	30RPM	
Life,min	5Million rpm	
Start Torque max	0.05Nm	
Torque,max	0.05Nm	
Material	Aluminium alloy	
Surface treatment	Conductive oxidation	
Weight(aroud)	130g	
Working condition		
Temperature range	-40°C...+70°C	
Relative humidity,max	95%	
IP grade	IP60	
Storage condition		
Temperature range	-55°C...+85°C	
Relative humidity,max	95%	

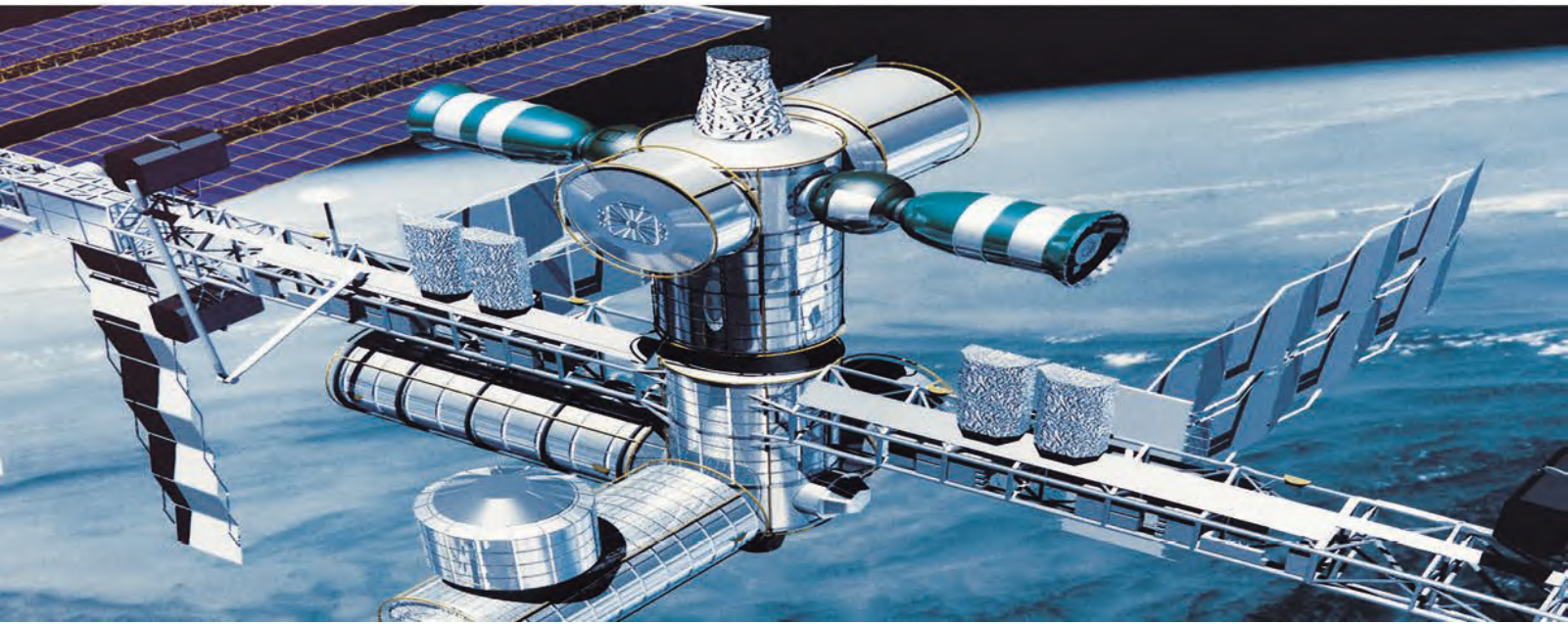

MOFLON

Two Way Coaxial Rotary Joint

Part number	RJ02-501B	
Channel	Channel 1	Channel 2
Connector type	SMA-F(50Ω)	SMA-F(50Ω)
Type	I	I
Power	DC-4.5GHz	DC-4.5GHz
Peak power,max	1KW	1KW
Rated power,max	100W DC-2GHz	10W
	60W 2-4.5GHz	
Voltage standing wave ratio,max	1.2	1.5
Voltage standing wave ratio max floating value	0.05	0.2
Insertion loss,max	0.25dB	0.4dB
Insertion loss max floating value	0.05dB	0.15dB
Isolation,min	50dB	50dB
Relative stability,max	1deg	4deg
Rotating speed,max	30RPM	
Life,min	5Million rpm	
Start Torque max	0.05Nm	
Torque,max	0.05Nm	
Material	Aluminium alloy	
Surface treatment	Conductive oxidation	
Weight(aroud)	140g	
Working condition		
Temperature range	-40°C...+70°C	
Relative humidity,max	95%	
IP grade	IP60	
Storage condition		
Temperature range	-55°C...+85°C	
Relative humidity,max	95%	

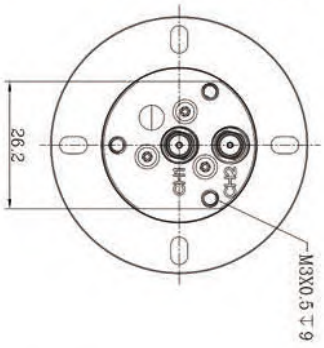

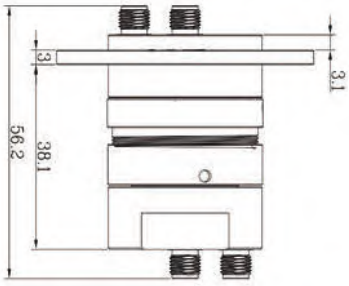

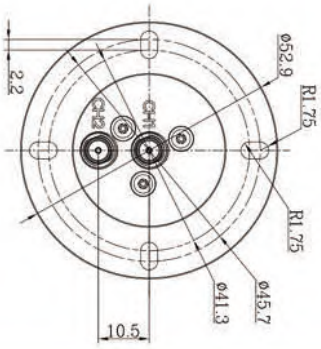

MOFLON

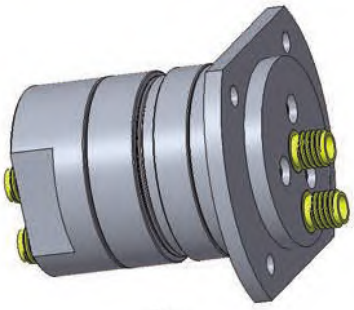

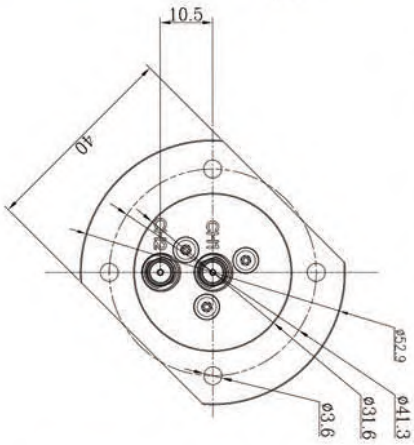

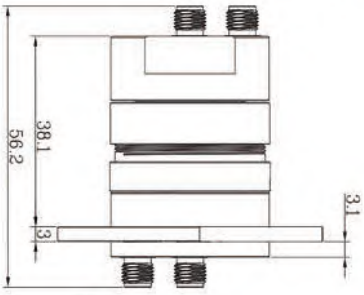

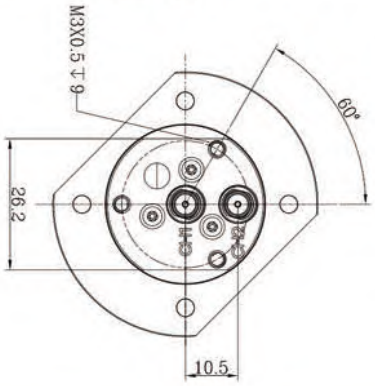

Two Way Coaxial Rotary Joint

Part number	RJ02-501C	
Channel	Channel 1	Channel 2
Connector type	SMA-F(50Ω)	SMA-F(50Ω)
Type	I	I
Power	DC-4.5GHz	DC-4.5GHz
Peak power,max	1KW	1KW
Rated power,max	100W DC-2GHz	10W
	60W 2-4.5GHz	
Voltage standing wave ratio,max	1.2	1.5
Voltage standing wave ratio max floating value	0.05	0.2
Insertion loss,max	0.25dB	0.4dB
Insertion loss max floating value	0.05dB	0.15dB
Isolation,min	50dB	50dB
Relative stability,max	1deg	4deg
Rotating speed,max	30RPM	
Life,min	5Million rpm	
Start Torque max	0.05Nm	
Torque,max	0.05Nm	
Material	Aluminium alloy	
Surface treatment	Conductive oxidation	
Weight(aroud)	140g	
Working condition		
Temperature range	-40°C...+70°C	
Relative humidity,max	95%	
IP grade	IP60	
Storage condition		
Temperature range	-55°C...+85°C	
Relative humidity,max	95%	

MOFLON

Two Way Coaxial Rotary Joint

Part number	RJ02-501D	
Channel	Channel 1	Channel 2
Connector type	SMA-F(50Ω)	SMA-F(50Ω)
Type	I	I
Power	DC-4.5GHz	DC-4.5GHz
Peak power,max	1KW	1KW
Rated power,max	100W DC-2GHz	10W
	60W 2-4.5GHz	
Voltage standing wave ratio,max	1.2	1.5
Voltage standing wave ratio max floating value	0.05	0.2
Insertion loss,max	0.25dB	0.4dB
Insertion loss max floating value	0.05dB	0.15dB
Isolation,min	50dB	50dB
Relative stability,max	1deg	4deg
Rotating speed,max	30RPM	
Life,min	5Million rpm	
Start Torque max	0.05Nm	
Torque,max	0.05Nm	
Material	Aluminium alloy	
Surface treatment	Conductive oxidation	
Weight(aroud)	130g	
Working condition		
Temperature range	-40°C...+70°C	
Relative humidity,max	95%	
IP grade	IP60	
Storage condition		
Temperature range	-55°C...+85°C	
Relative humidity,max	95%	

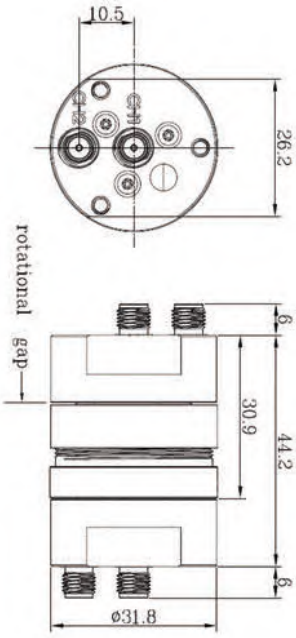

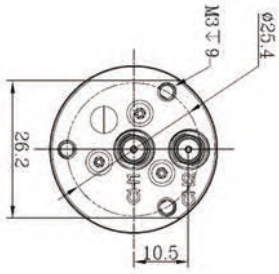

MOFLON

Two Way Coaxial Rotary Joint

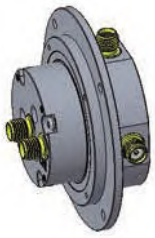

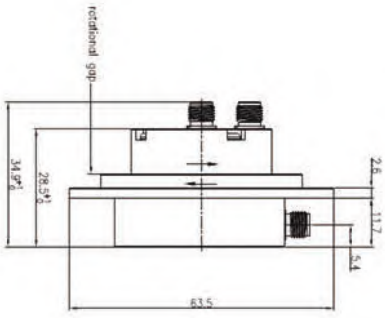

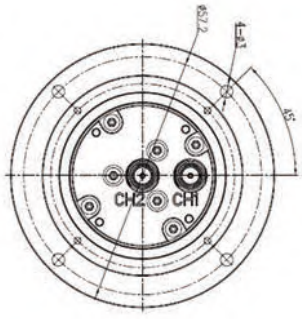

Part number	RJ02-509	
Channel	Channel 1	Channel 2
Connector type	SMA-F(50Ω)	SMA-F(50Ω)
Typel	L	L
Power	DC-5GHz	DC-16GHz
Peak power,max	1KW	1KW
Rated power,max	10W	100W@ DC-2GHz 60W@ 2-4GHz 35W @ 4-8GHz 25W@ 8-12GHz 17W @ 12-16GHz
Voltage standing wave ratio,max	1.5@DC-5GHz	1.3@ DC-6GHz 1.4@ 6-12GHz 1.6@ 12-16GHz
Voltage standing wave ratio max floating value	0.2	0.1
Insertion loss,max	0.5dB@DC-5GHz	0.3dB@DC-6GHz 0.6dB@6-16GHz
Insertion loss max floating value	0.3dB	0.06dB
Isolation,min	50dB	50dB
Relative stability,max	4deg	1deg
Rotating speed,max	30RPM	
Life,min	5Million rpm	
Start Torque max	0.08Nm	
Torque,max	0.05Nm	
Material	Aluminium alloy	
Surface treatment	Conductive oxidation	
Weight(aroud)	130g	
Working condition		
Temperature range	-40°C...+70°C	
Relative humidity,max	95%	
IP grade	IP40	
Storage condition		
Temperature range	-55°C...+85°C	
Relative humidity,max	95%	

MOFLON

Two Way Coaxial Rotary Joint

Part number	RJ02-511	
Channel	Channel 1	Channel 2
Connector type	SMA-F(50Ω)	SMA-F(50Ω)
Type	L	L
Power	DC-4.5GHz	DC-4.5GHz
Peak power,max	1KW	1KW
Rated power,max	100W DC-2GHz	10W
	60W 2-4.5GHz	
Voltage standing wave ratio,max	1.2	1.5
Voltage standing wave ratio max floating value	0.05	0.2
Insertion loss,max	0.35dB	0.5dB
Insertion loss max floating value	0.05dB	0.15dB
Isolation,min	50dB	50dB
Relative stability,max	1deg	4deg
Rotating speed,max	30RPM	
Life,min	5Million rpm	
Start Torque max	0.05Nm	
Torque,max	0.05Nm	
Material	Aluminium alloy	
Surface treatment	Conductive oxidation	
Weight(aroud)	110g	
Working condition		
Temperature range	-40°C...+70°C	
Relative humidity,max	95%	
IP grade	IP60	
Storage condition		
Temperature range	-55°C...+85°C	
Relative humidity,max	95%	

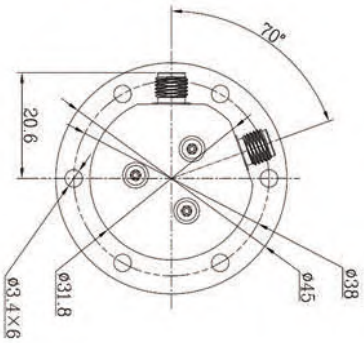

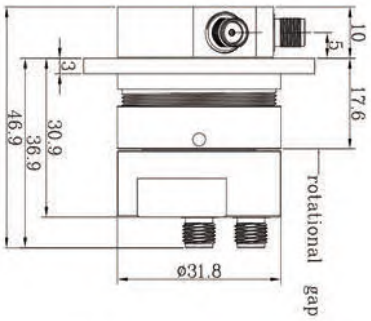

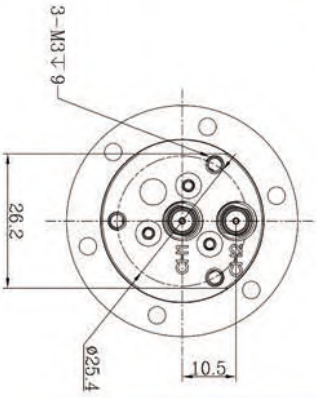

MOFLON

Two Way Coaxial Rotary Joint

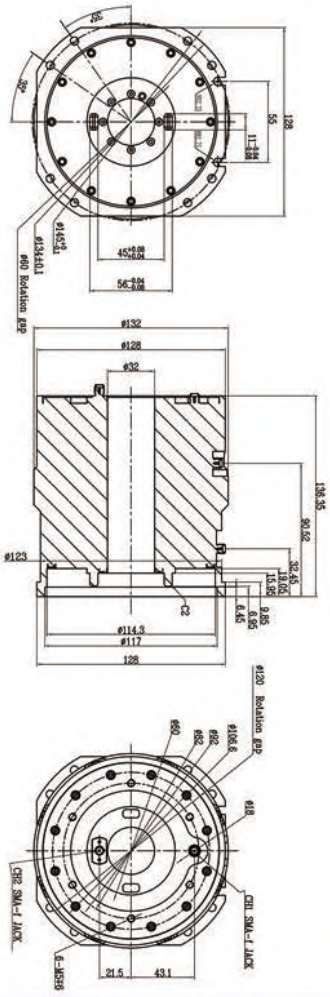

Part number	RJ02-522	
Channel	Channel 1	Channel 2
Connector type	SMA-F(50Ω)	SMA-F(50Ω)
Type	L	L
Power	980-1150MHz	980-1150MHz
Peak power,max	2KW	2KW
Rated power,max	200W	150W
Voltage standing wave ratio,max	1.5	1.5
Voltage standing wave ratio max floating value	0.1	0.1
	0.85dB	0.85dB
Insertion loss,max	0.15dB	0.15dB
Insertion loss max floating value	60dB	60dB
Relative stability,max	10RPM	
Rotating speed,max	75Million rpm	
Life,min	0.7Nm	
Start Torque max	0.6Nm	
Torque,max	Aluminium alloy	
Material	Conductive oxidation	
Surface treatment	3.2Kg	
Weight(aroud)		
Working condition	-40°C...+70°C	
Temperature range	95%	
Relative humidity,max	IP40	
IP grade		
Storage condition	-55°C...+85°C	
Temperature range	95%	
Relative humidity,max		

MOFLON

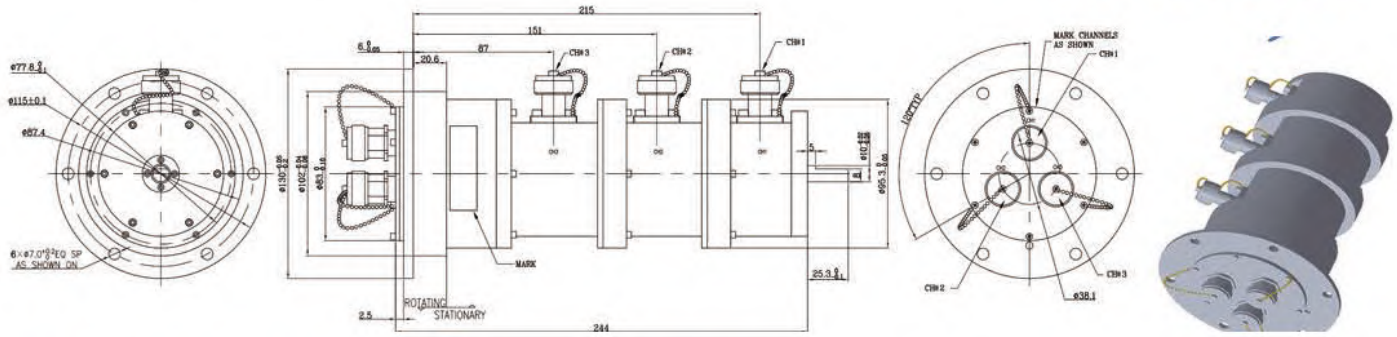

Three Way Coaxial Rotary Joint

Part number	RJ03-012		
Channel	Channel 1	Channel 2	Channel 3
Connector type	N-F(50Ω)	N-F(50Ω)	N-F(50Ω)
Type	L	L	L
Power	1.01-1.1GHz	1.01-1.1GHz	1.01-1.1GHz
Peak power,max	10KW	10KW	10KW
Rated power,max	150W	150W	150W
Voltage standing wave ratio,max	1.25	1.25	1.25
Voltage standing wave ratio max floating value	0.05	0.05	0.08
Insertion loss,max	0.5dB	0.5dB	0.5dB
Isolation,min	60dB	60dB	60dB
Relative stability,max	2deg	2deg	2deg
Rotating speed,max	24RPM		
Life,min	1Million rpm		
Torque,max	2.7Nm		
Material	Aluminium alloy		
Surface treatment	Conductive oxidation		
Weight(aroud)	4.1Kg		
Working condition			
Temperature range	-40°C...+70°C		
Relative humidity,max	100%		
IP grade	IP40		
Storage condition			
Temperature range	-55°C...+85°C		
Relative humidity,max	95%		

MOFLON

Three Way Coaxial Rotary Joint

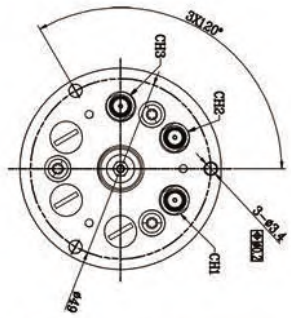

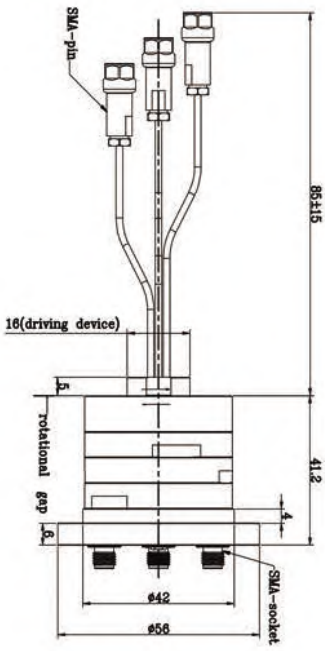

Part number	RJ03-513
Channel	1-3
Connector type	SMA-M/F(50Ω)
Type	I
Power	DC-3GHz
Peak power,max	1KW
Rated power,max	50W@DC-1GHz 35W@1.0-2.5GHz 25W@2.5-3GHz
Voltage standing wave ratio,max	1.7@DC-2.5GHz 2.4@2.5-3GHz
Voltage standing wave ratio max floating value	0.5@DC-2.5GHz 1.0@2.5-3GHz
Insertion loss,max	0.7dB@DC-2.5GHz 1.0dB@2.5-3GHz
insertion loss max floating value	0.2dB@DC-2.5GHz 0.5dB@2.5-3GHz
Isolation, min	40dB
Rotating speed,max	60RPM
Life,min	10Million rpm
Start Torque max	2Nm
Torque,max	2Nm
Material	Aluminium alloy
Surface treatment	Conductive oxidation
Weight(aroud)	190g
Working condition	
Temperature range	-40℃...+70℃
Relative humidity,max	95%
IP grade	IP43
Storage condition	
Temperature range	-55℃...+85℃
Relative humidity,max	95%

MOFLON

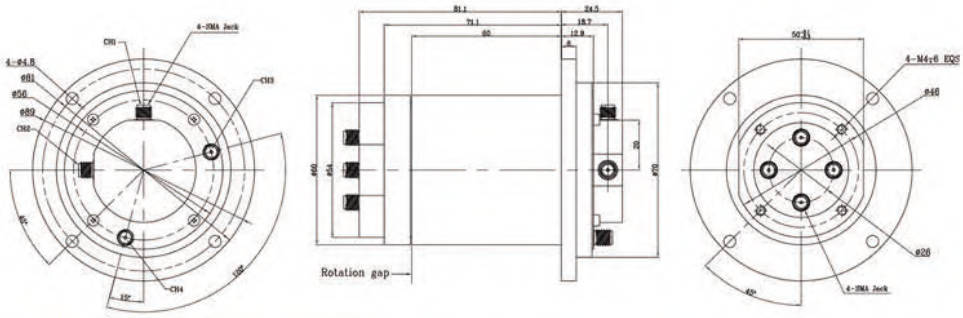

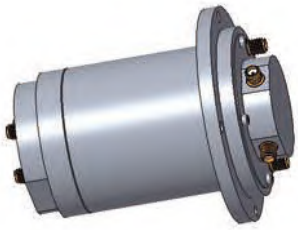

Four Way Coaxial Rotary Joint

Part number	RJ04-533			
Channel	Channel 1	Channel 2	Channel 3	Channel 4
Connector type	SMA-F(50Ω)	SMA-F(50Ω)	SMA-F(50Ω)	SMA-F(50Ω)
Type	I	I	I	I
Power	DC-4GHz	DC-4GHz	DC-3GHz	DC-3GHz
Rated power,max	50W	10W	10W	10W
Voltage standing wave ratio,max	1.35	1.5	1.5	1.5
Voltage standing wave ratio max floating value	0.1	0.15	0.15	0.15
Insertion loss,max	1.2dB	1.4dB	1.4dB	1.4dB
Insertion loss max floating value	0.05dB	0.1dB	0.1dB	0.1dB
Isolation,min	50dB	50dB	50dB	50dB
Relative stability,max	1deg	4deg	4deg	4deg
Rotating speed,max	30RPM			
Life,min	5Million rpm			
Torque,max	0.8Nm			
Material	Aluminium alloy			
Surface treatment	Conductive oxidation			
Weight(aroud)	850g			
Working condition				
Temperature range	-40°C...+70°C			
Relative humidity,max	95%			
IP grade	IP60			
Storage condition				
Temperature range	-55°C...+85°C			
Relative humidity,max	95%			

MOFLON

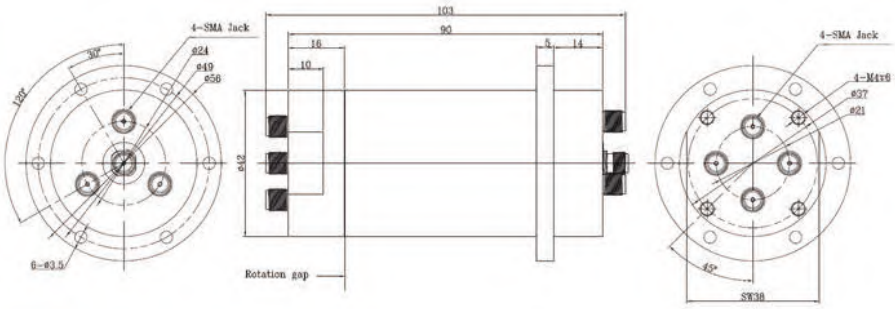

Four Way Coaxial Rotary Joint

Part number	RJ04-537			
Channel	Channel 1	Channel 2	Channel 3	Channel 4
Connector type	SMA-F(50Ω)	SMA-F(50Ω)	SMA-F(50Ω)	SMA-F(50Ω)
Type	I	I	I	I
Power	DC-4GHz	DC-4GHz	DC-4GHz	DC-4GHz
Rated power,max	50W	10W	10W	10W
Voltage standing wave ratio,max	1.3	1.5	1.5	1.5
Voltage standing wave ratio max floating value	0.1	0.1	0.1	0.1
Insertion loss,max	1.3dB	1dB	1dB	1dB
Insertion loss max floating value	0.1dB	0.15dB	0.15dB	0.15dB
Isolation,min	55dB	55dB	55dB	55dB
Relative stability,max	1deg	4deg	4deg	4deg
Rotating speed,max	30RPM			
Life,min	5Million rpm			
Torque,max	0.8Nm			
Material	Aluminium alloy			
Surface treatment	Conductive oxidation			
Weight(aroud)	700g			
Working condition				
Temperature range	-40°C...+70°C			
Relative humidity,max	95%			
IP grade	IP60			
Storage condition				
Temperature range	-55°C...+85°C			
Relative humidity,max	95%			

MOFLON

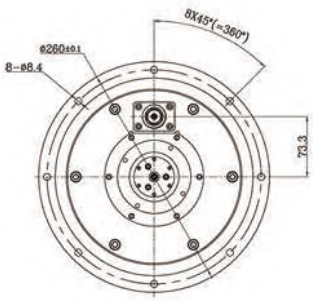

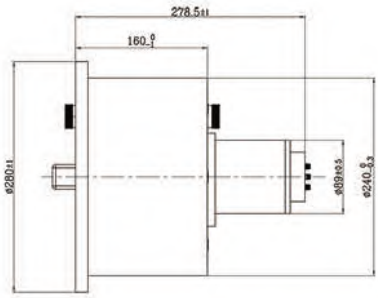

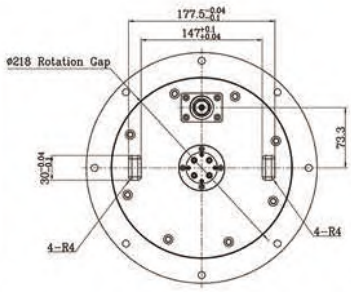

Five Way Coaxial Rotary Joint

Part number	R-5-US				
Channel	Channel 1	Channel 2	Channel 3	Channel 4	Channel 5
Connector type	L29-F(50Ω)	SMA-F(50Ω)	SMA-F(50Ω)	SMA-F(50Ω)	SMA-F(50Ω)
Type	I	I	I	I	I
Power	0.63-0.66GHz	DC-4GHz	DC-4GHz	DC-4GHz	DC-4GHz
Peak power,max	20KW	1KW	1KW	1KW	1KW
Rated power,max	2KW	150W	150W	20W	20W
Voltage standing wave ratio,max	1.25	1.5	1.5	1.5	1.5
Voltage standing wave ratio max floating value	0.1	0.3	0.3	0.3	0.3
Insertion loss,max					
Insertion loss max floating value	0.3dB	0.8dB	0.8dB	0.8dB	0.8dB
Isolation,min	0.1dB	0.2dB	0.2dB	0.2dB	0.2dB
Relative stability,max	60dB	60dB	60dB	60dB	60dB
Rotating speed,max	2deg	5deg	5deg	5deg	5deg
Life,min	10RPM				
Torque,max	5Million rpm				
Material	Aluminium alloy				
Surface treatment	Conductive oxidation				
Weight(aroud)	21Kg				
Working condition					
Temperature range	-40°C...+70°C				
Relative humidity,max	95%				
IP grade	IP51				
Storage condition					
Temperature range	-55°C...+85°C				
Relative humidity,max	95%				

MOFLON

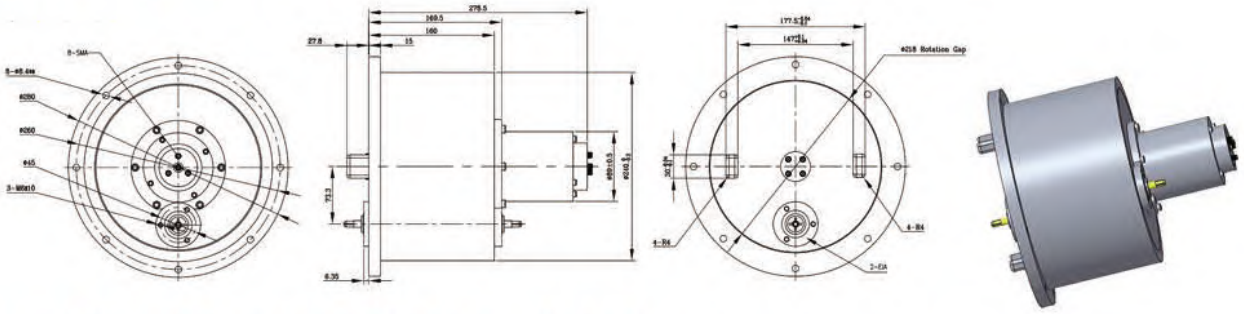

Five Way Coaxial Rotary Joint

Part number	RJ05-530				
Channel	Channel 1	Channel 2	Channel 3	Channel 4	Channel 5
Connector type	EIA-F(50Ω)	SMA-F(50Ω)	SMA-F(50Ω)	SMA-F(50Ω)	SMA-F(50Ω)
Type	I	I	I	I	I
Power	0.63-0.66GHz	DC-2.5GHz	DC-2.5GHz	DC-2.5GHz	DC-2.5GHz
Peak power,max	20KW	1KW	1KW	1KW	1KW
Rated power,max	3KW	20W	20W	20W	150W
Voltage standing wave ratio,max	1.25	1.5	1.5	1.5	1.5
Voltage standing wave ratio max floating value	0.1	0.3	0.3	0.3	0.3
Insertion loss,max	0.3dB	0.8dB	0.8dB	0.8dB	0.8dB
Insertion loss max floating value	0.1dB	0.2dB	0.2dB	0.2dB	0.2dB
Isolation,min	60dB	60dB	60dB	60dB	60dB
Relative stability,max	2deg	5deg	5deg	5deg	5deg
Rotating speed,max	10RPM				
Life,min	5Million rpm				
Material	Aluminium alloy				
Surface treatment	Conductive oxidation				
Weight(aroud)	21Kg				
Working condition					
Temperature range	-40°C...+70°C				
Relative humidity,max	95%				
IP grade	IP51				
Storage condition					
Temperature range	-55°C...+85°C				
Relative humidity,max	95%				

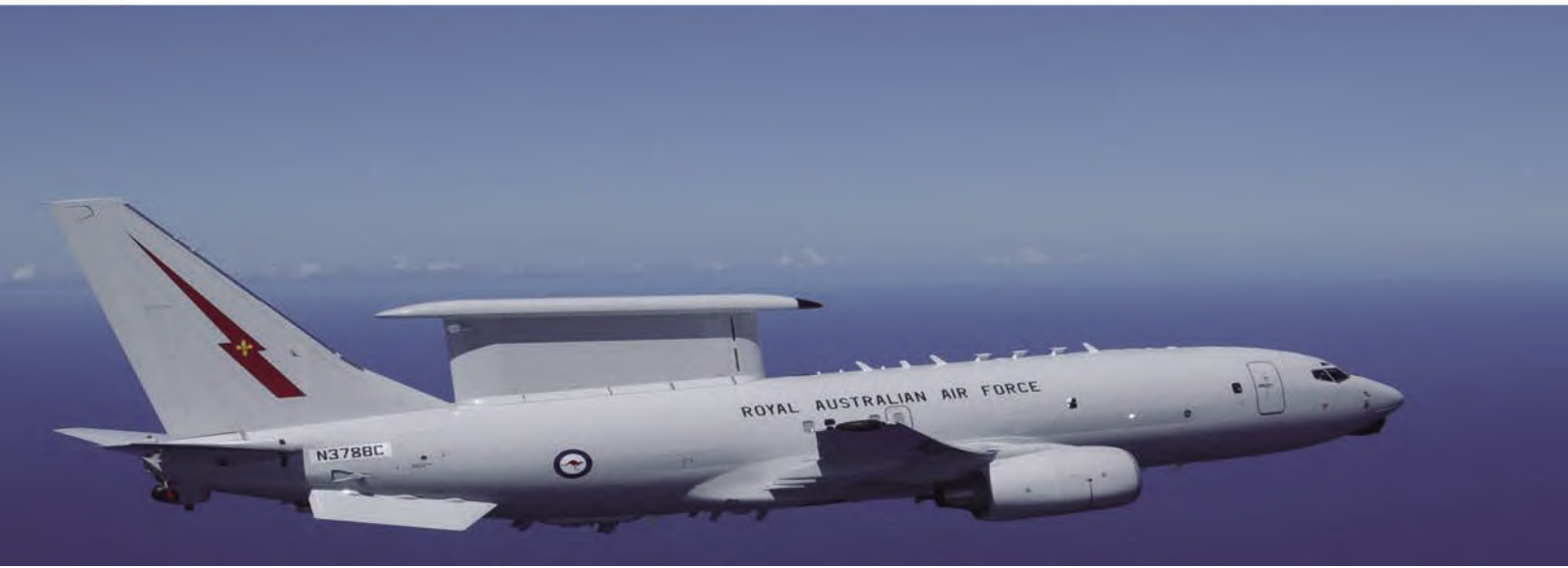

MOFLON

Single Pitch Waveguide Rotary Joint

Part number	BD01-501
Connector type	R120
Type	L
Power	13.75-14.5MHz
Peak power,max	5KW
Rated power,max	200W
Voltage standing wave ratio,max	1.2
Voltage standing wave ratio max floating value	0.1
Insertion loss,max	0.2dB
Insertion loss max floating value	0.5dB
Relative stability,max	60dB
Rotating speed,max	120RPM
Life,min	10Million rpm
Torque,max	0.2Nm
Material	Aluminium alloy
Surface treatment	Conductive oxidation
Weight(aroud)	300g
Working condition	
Temperature range	-40°C...+70°C
Relative humidity,max	95%
IP grade	IP40
Storage condition	
Temperature range	-55°C...+85°C
Relative humidity,max	95%

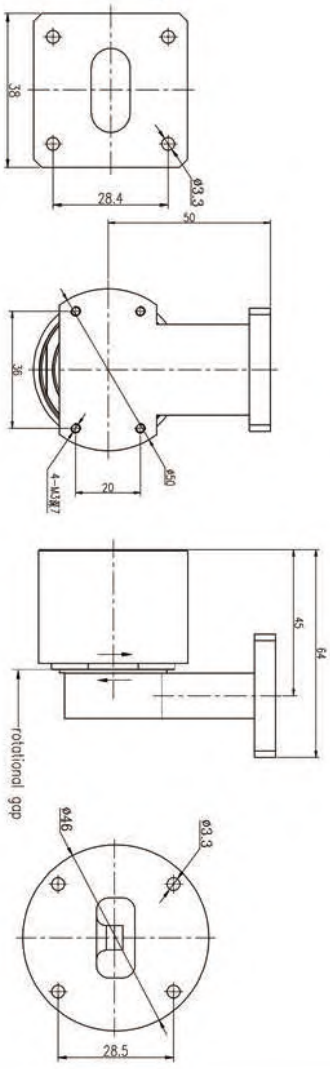

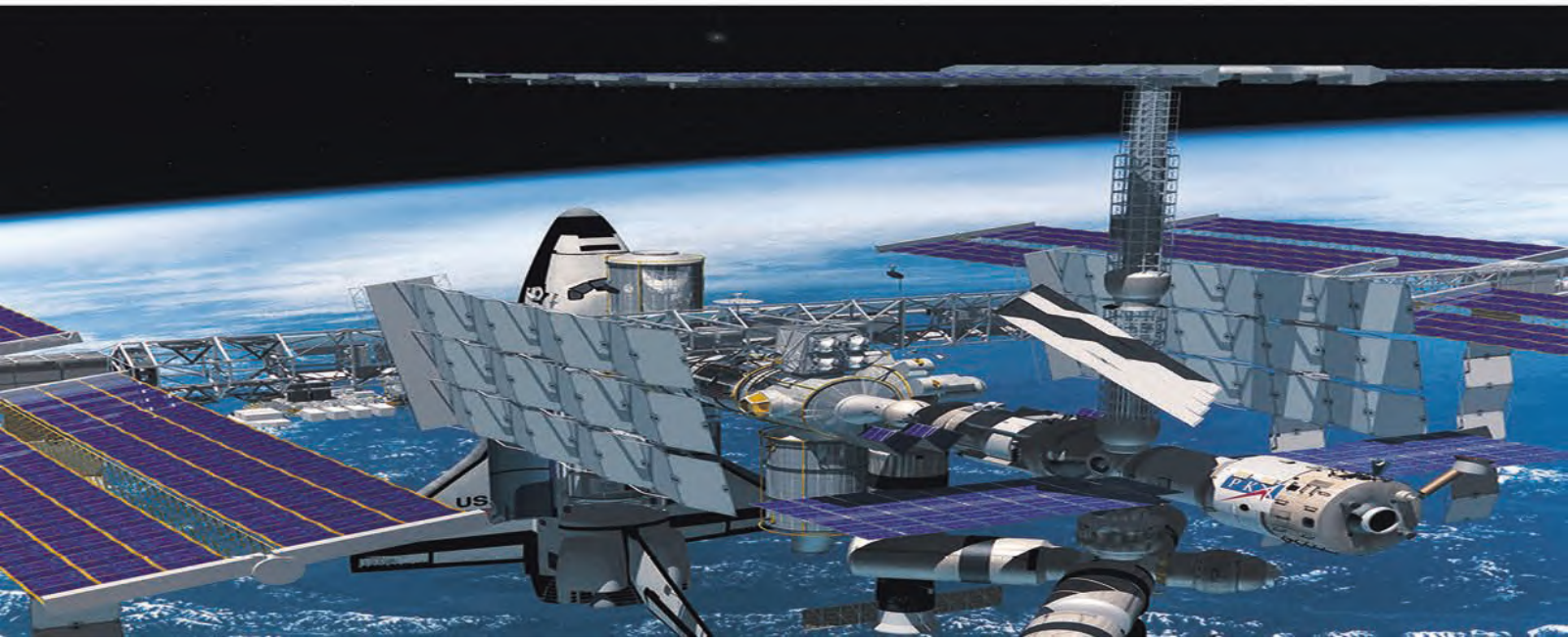

MOFLON

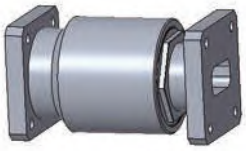

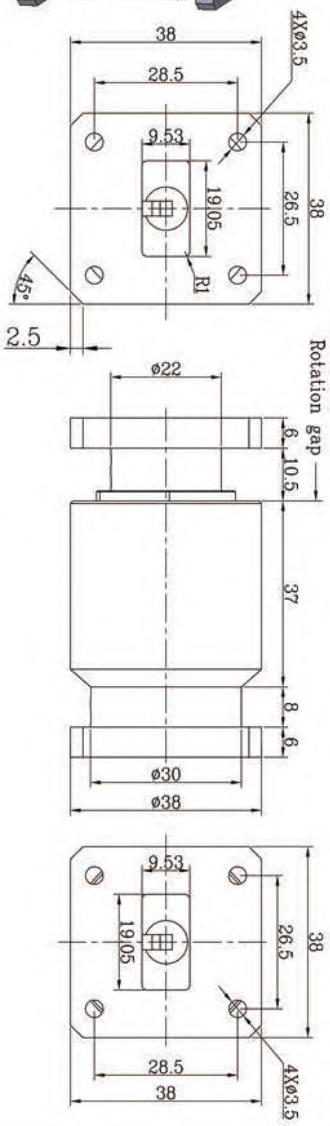

Single Pitch Waveguide Rotary Joint

Part number	BD01-503
Connector type	R120
Type	L
Power	13-15MHz
Peak power,max	5KW
Rated power,max	750W
Voltage standing wave ratio,max	1.2
Voltage standing wave ratio max floating value	0.05
Insertion loss,max	0.2dB
Insertion loss max floating value	0.05dB
Rotating speed,max	60RPM
Life,min	20Million rpm
Torque,max	0.7Nm
Material	Aluminium alloy
Surface treatment	Conductive oxidation
Weight(aroud)	320g
Working condition	
Temperature range	-40°C...+70°C
Relative humidity,max	95%
IP grade	IP50
Storage condition	
Temperature range	-55°C...+85°C
Relative humidity,max	95%

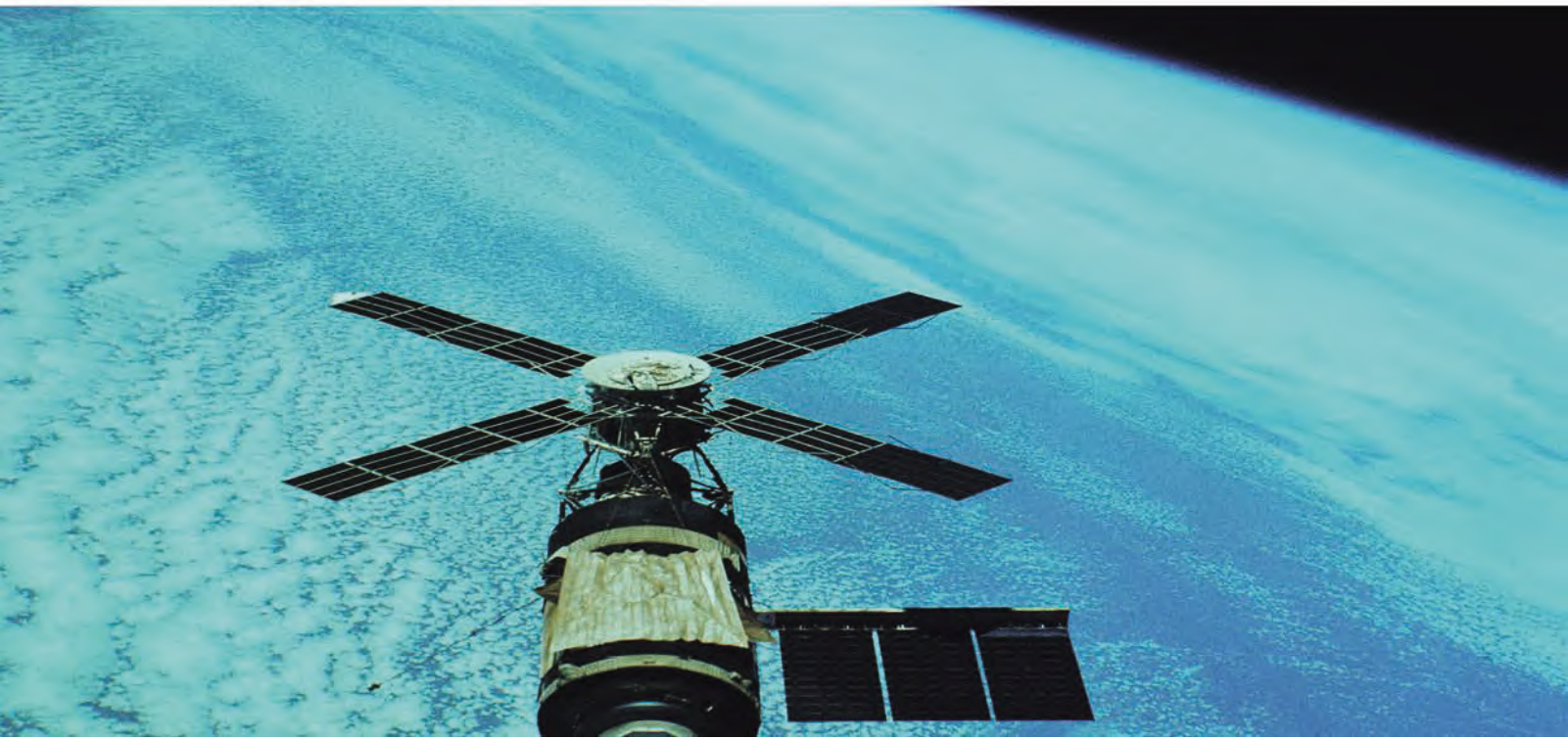

MOFLON

Single Pitch Waveguide Rotary Joint

Part number	BD01-504
Connector type	R100
Type	I
Power	9-10GHz
Peak power,max	5KW
Rated power,max	200W
Voltage standing wave ratio,max	1.3
Voltage standing wave ratio max floating value	0.1
Insertion loss,max	0.4dB
Insertion loss max floating value	0.05dB
Rotating speed,max	60RPM
Life,min	20Million rpm
Torque,max	0.7Nm
Material	Aluminium alloy
Surface treatment	Conductive oxidation
Weight(aroud)	460g
Working condition	
Temperature range	-40°C...+70°C
Relative humidity,max	95%
IP grade	IP54
Storage condition	
Temperature range	-55°C...+85°C
Relative humidity,max	95%

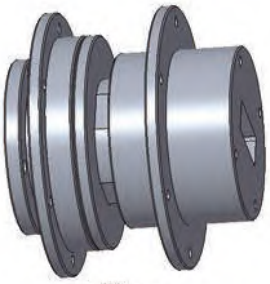

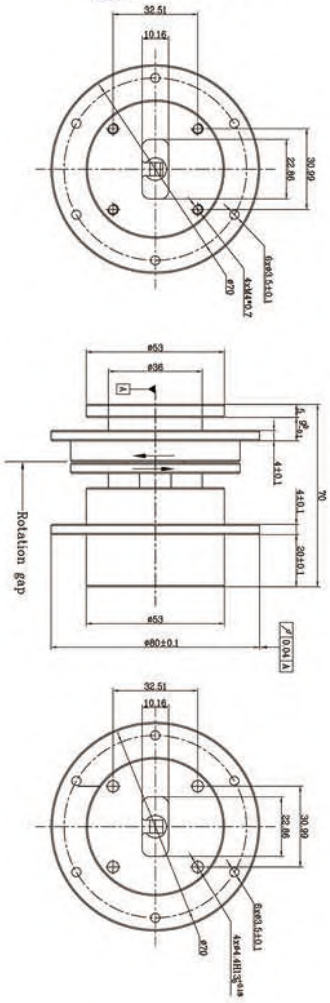

MOFLON

Two Way Waveguide Rotary Joint

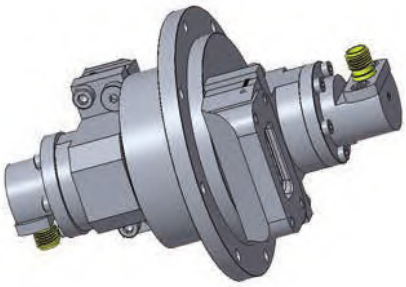

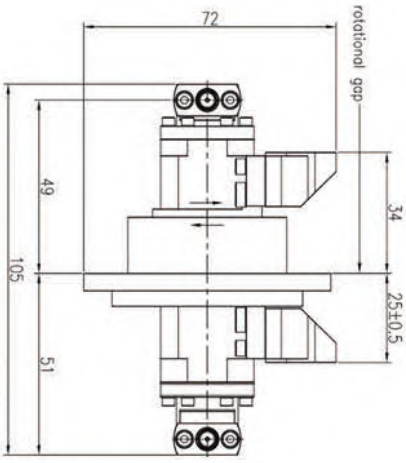

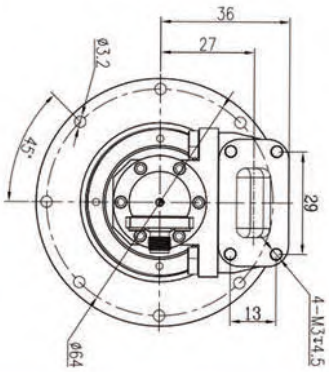

Part number	HH02-501	
Channel	Channel 1	Channel 2
Connector type	R120	SMA-F(50Ω)
Type	I	U
Power	14-14.5GHz	DC-2.05GHz
Peak power,max	10KW	-
Rated power,max	100W	10W
Voltage standing wave ratio,max	1.2	1.2
Voltage standing wave ratio max floating value	0.1	0.05
	0.2dB	0.4dB
Insertion loss,max	0.05dB	0.1dB
Insertion loss max floating value	60dB	60dB
Relative stability,max	1deg	1deg
Rotating speed,max	60RPM	
Life,min	5Million rpm	
Torque,max	0.2Nm	
Material	Aluminium alloy	
Surface treatment	Conductive oxidation	
Weight(aroud)	320g	
Working condition		
Temperature range	-40°C...+70°C	
Relative humidity,max	95%	
IP grade	IP64	
Storage condition		
Temperature range	-55°C...+85°C	
Relative humidity,max	95%	

MOFLON

Two Way Waveguide Rotary Joint

Part number	HH02-502	
Channel	Channel 1	Channel 2
Connector type	R120	SMA-F(50Ω)
Type	I	U
Power	14-14.5GHz	DC-2.05GHz
Peak power,max	10KW	-
Rated power,max	100W	10W
Voltage standing wave ratio,max	1.2	1.2
Voltage standing wave ratio max floating value	0.1	0.05
	0.2dB	0.4dB
Insertion loss,max	0.05dB	0.1dB
Insertion loss max floating value	60dB	60dB
Relative stability,max	1deg	1deg
Rotating speed,max	60RPM	
Life,min	5Million rpm	
Torque,max	0.2Nm	
Material	Aluminium alloy	
Surface treatment	Conductive oxidation	
Weight(aroud)	310g	
Working condition		
Temperature range	-40°C...+70°C	
Relative humidity,max	95%	
IP grade	IP64	
Storage condition		
Temperature range	-55°C...+85°C	
Relative humidity,max	95%	

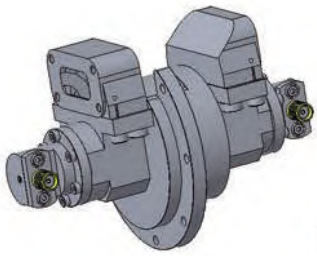

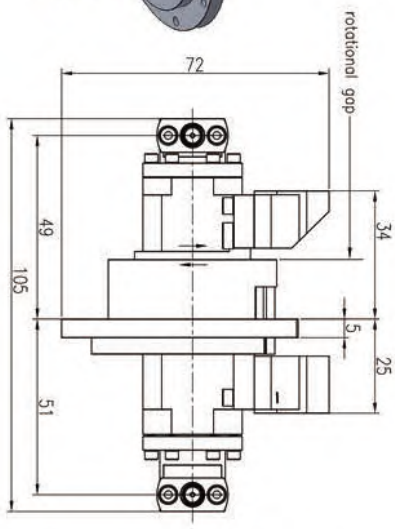

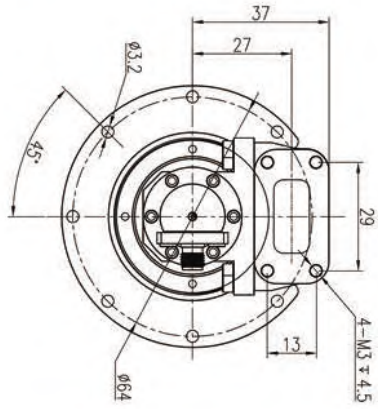

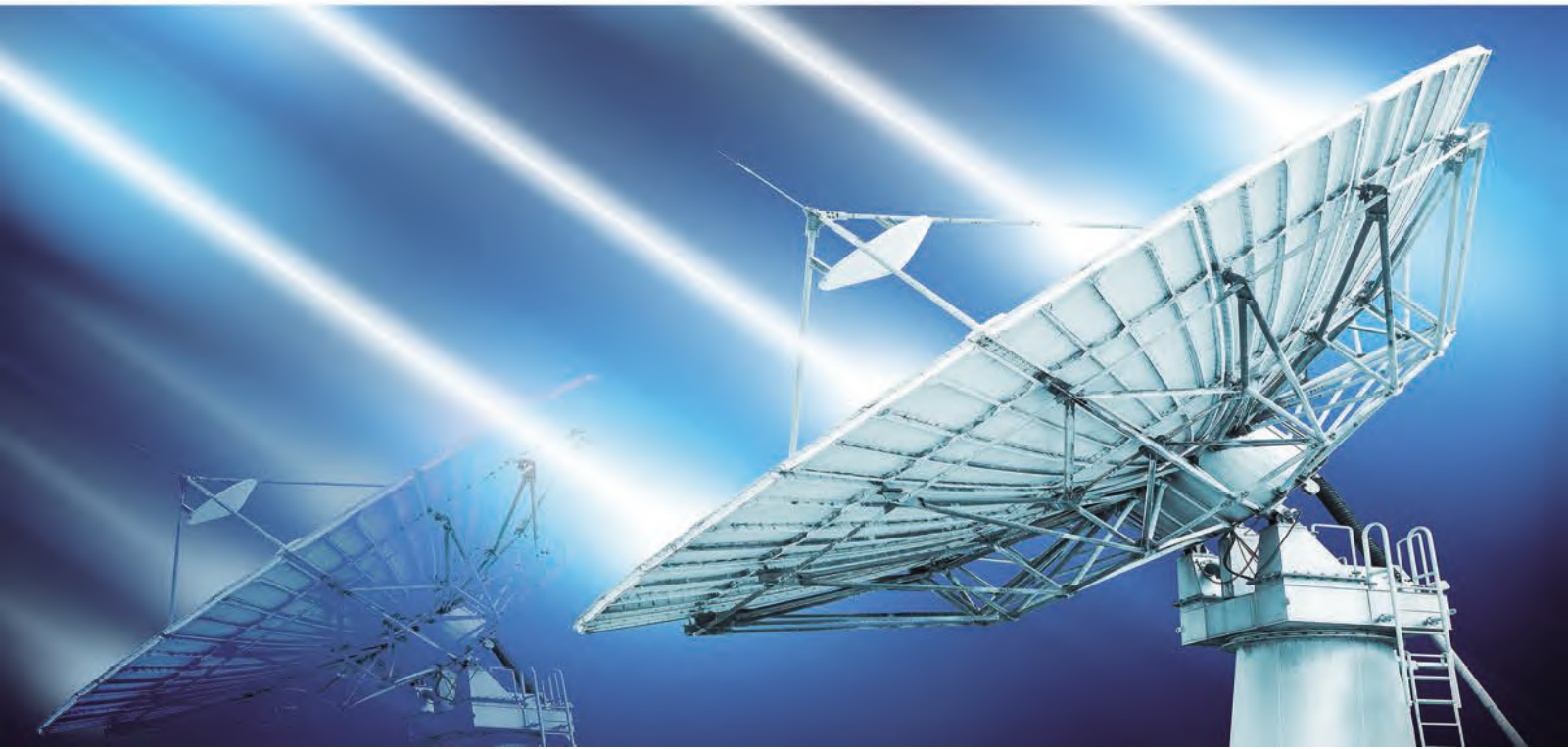

MOFLON

Two Way Waveguide Rotary Joint

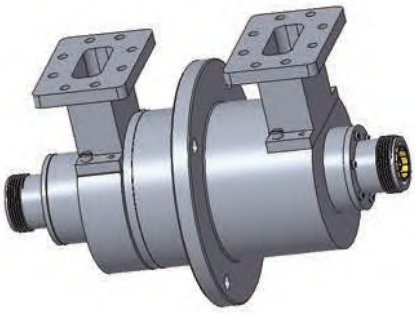

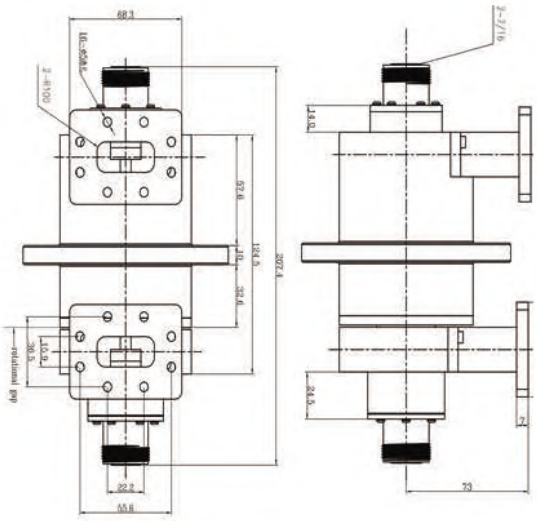

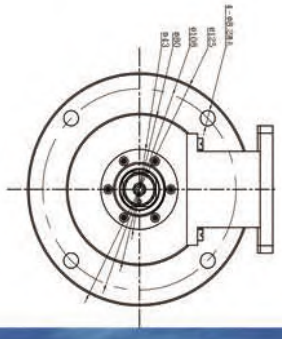

Part number	HH02-504	
Channel	Channel 1	Channel 2
Connector type	R70	7-16(50Ω)
Type	U	I
Power	5.9-7.2GHz	DC-2.05GHz
Peak power,max	10KW	10KW
Rated power,max	600W	200W
Voltage standing wave ratio,max	1.4	1.3
Voltage standing wave ratio max floating value	0.1	0.05
	0.4dB	0.4dB
Insertion loss,max	0.05dB	0.05dB
Insertion loss max floating value	60dB	60dB
Relative stability,max	1deg	1deg
Rotating speed,max	60RPM	
Life,min	5Million rpm	
Torque,max	0.8Nm	
Material	Aluminium alloy	
Surface treatment	Conductive oxidation	
Weight(aroud)	2.2Kg	
Working condition		
Temperature range	-40°C...+70°C	
Relative humidity,max	95%	
IP grade	IP60	
Storage condition		
Temperature range	-55°C...+85°C	
Relative humidity,max	95%	

MOFLON

Two Way Waveguide Rotary Joint

Part number	HH02-506	
Channel	Channel 1	Channel 2
Connector type	R120	SMA-F(50Ω)
Type	I	U
Power	14-14.5GHz	DC-12GHz
Peak power,max	10KW	-
Rated power,max	100W	10W
Voltage standing wave ratio,max	1.2	1.35
Voltage standing wave ratio max floating value	0.1	0.05
	0.2dB	0.7dB
Insertion loss,max	0.05dB	0.1dB
Insertion loss max floating value	60dB	60dB
Relative stability,max	1deg	1deg
Rotating speed,max	60RPM	
Life,min	5Million rpm	
Torque,max	0.2Nm	
Material	Aluminium alloy	
Surface treatment	Conductive oxidation	
Weight(aroud)	310g	
Working condition		
Temperature range	-40°C...+70°C	
Relative humidity,max	95%	
IP grade	IP64	
Storage condition		
Temperature range	-55°C...+85°C	
Relative humidity,max	95%	

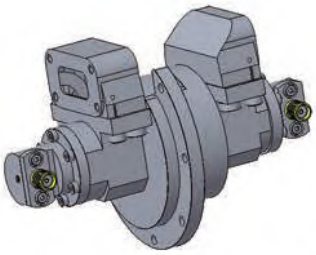

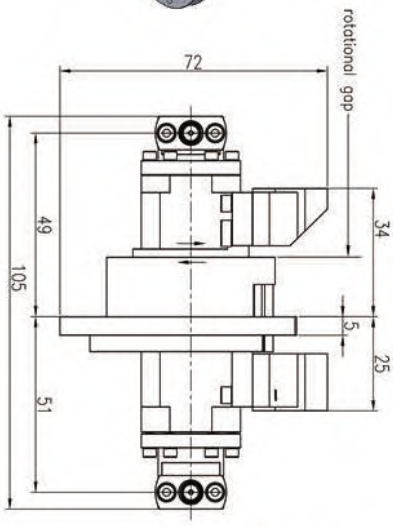

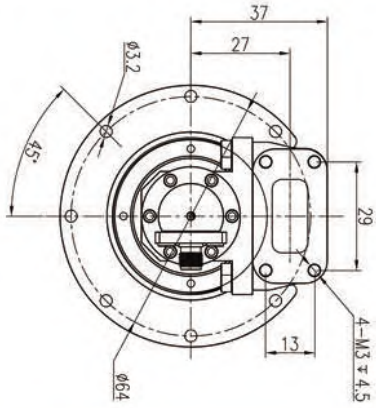

MOFLON

Three Way Waveguide Rotary Joint

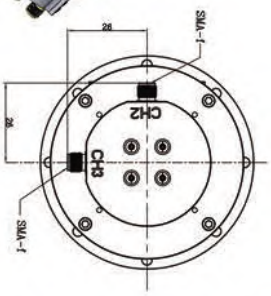

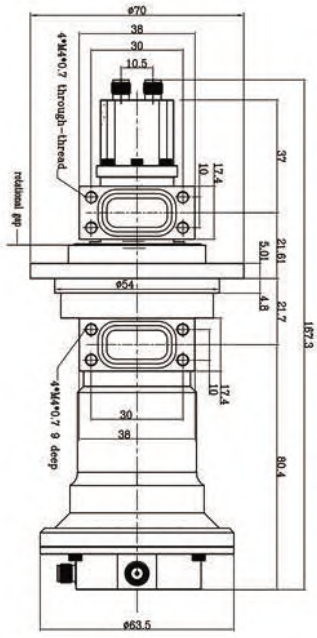

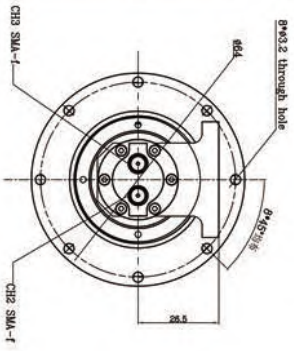

Part number	HH03-502		
Channel	Channel 1	Channel 2	Channel 3
Connector type	R120	SMA-F(50Ω)	SMA-F(50Ω)
Type	U	L	L
Power	13.75-14.5GHz	DC-12.75GHz	DC-5GHz
Peak power,max	2KW	1KW	1KW
Rated power,max	450W	25W@DC-2GHz 17W@2-2GHz 12W@4-8GHz 10W@8-12GHz	10W
Voltage standing wave ratio,max	1.3@13.75-14.5GHz 1.2@14-14.5GHz	1.6	1.6
Voltage standing wave ratio max floating value	0.1	0.1	0.5
Insertion loss,max	0.3dB@13.75-14.5GHz 0.2@14-14.5GHz	1.0dB@DC-6GHz 1.5@6-12.5GHz	1dB
Insertion loss max floating value	0.05dB	0.06dB	0.5dB
Isolation,min	60dB CH1 TO CH2/3	50dB CH2 TO CH3	
Relative stability,max	2deg	1deg	2deg
Rotating speed,max	60RPM		
Life,min	5Million rpm		
Start Torque max	0.4Nm		
Torque,max	0.3Nm		
Material	Aluminium alloy		
Surface treatment	Conductive oxidation		
Weight(aroud)	600g		
Working condition			
Temperature range	-40°C...+70°C		
Relative humidity,max	100%		
IP grade	IP53		
Storage condition			
Temperature range	-55°C...+85°C		
Relative humidity,max	95%		

MOFLON

Rotary Joint Test Line
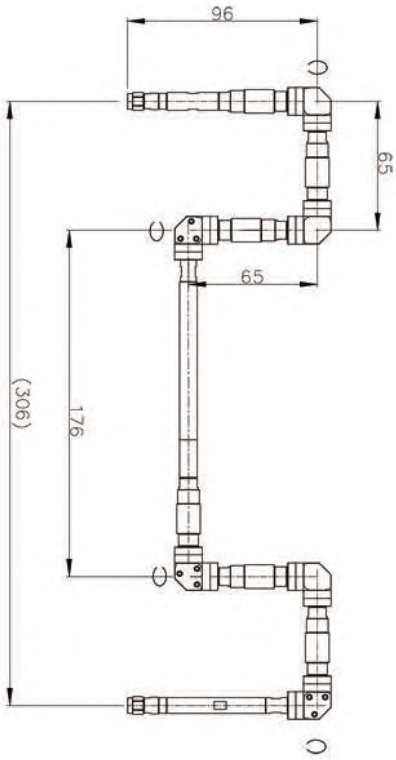
Part number	RJ-T-529
Connector type	2.92mm-M(50Ω)
Power	DC-4GHz
Rated power,max	2.5KW
Voltage standing wave ratio,max	1.15@DC-1GHz 1.25@4-9GHz 1.5@9-18GHz 1.7@18-26.5GHz 2.0@26.5-40GHz
Relative stability S11-S22	±1.5deg@DC-2.5GHz ±2.0deg@18-26.5GHz ±2.5deg@26.5-40GHz
Relative stability S11-S22	±0.05dB@DC-26.5GHz ±0.10dB@26.5-40GHz
Insertion loss,max	2.5dB@DC-18GHz 3.5dB@18-26.5GHz 4.5dB@26.5-40GHz
Life,min	10Million rpm
Working condition	
Temperature range	-40℃...+70℃
Relative humidity,max	95%
IP grade	IP50
Storage condition	
Temperature range	-55℃...+85℃
Relative humidity,max	95%